SFP28 BiDi 25G 10 km DDM

SFP28 Transceiver Series



- Data rate up to 25.78 Gb/s
- Up to 10 km transmission distance
- High sensitivity PIN photodiode and TIA
- Rate Adaptation
- Single LC connector
- Hot-pluggable 20-pin connector
- RoHS compliant and lead-free
- Low power consumption < 1.2 W
- Single +3.3 V ±5% power supply

Ascent's 25 Gb/s BiDi transceiver is a high-performance, long-reach optical module designed for up to 10 km transmission over single-mode fiber (SMF). Supporting data rates from 24.33 Gb/s to 25.78 Gb/s, the module is compliant with SFP28 MSA, SFF-8419, and SFF-8472 standards, making it suitable for high-speed applications such as 25G Ethernet and CPRI/eCPRI links. Its compact SFP28 form factor with a single LC interface enables efficient bidirectional transmission over a single fiber.

The transceiver utilizes a DML laser transmitter and a PIN/TIA receiver, and integrates internal clock and data recovery (CDR) units on both the transmitter and receiver chains for low jitter compliance. Operating at nominal wavelengths of approximately 1270 nm or 1330 nm, the module supports stable long-distance communication with high sensitivity and low noise characteristics. The differential AC-coupled Tx and Rx data interfaces are CML compatible, and the device is Class 1 laser safety compliant.

Designed for efficiency and reliability, the module offers low power consumption and supports both commercial and industrial operating environments. It also provides digital diagnostic monitoring (DDM) via a standard I²C interface, enabling real-time monitoring of key parameters such as temperature, voltage, bias current, and optical power. With its robust design and long-reach capability, the SFP28 25G BiDi transceiver is ideal for carrier-grade networks, long-distance data links, and next-generation access infrastructure.

Key Features

- Operating data rate up to 25.78Gbps
- Up to 10km transmission distance
- High sensitivity PIN photodiode and TIA
- Rate Adaptation
- LC single connector
- Hot pluggable 20pin connector
- Low power consumption < 1.2 W
- Single +3.3V ±5% power supply
- Compliant with SFF-8472
- Fully RoHS Compliant
- Operating temperature range:

  Commercial: 0°C to +70°C

  Industrial: -40°C to +85°C

Outline Diagram

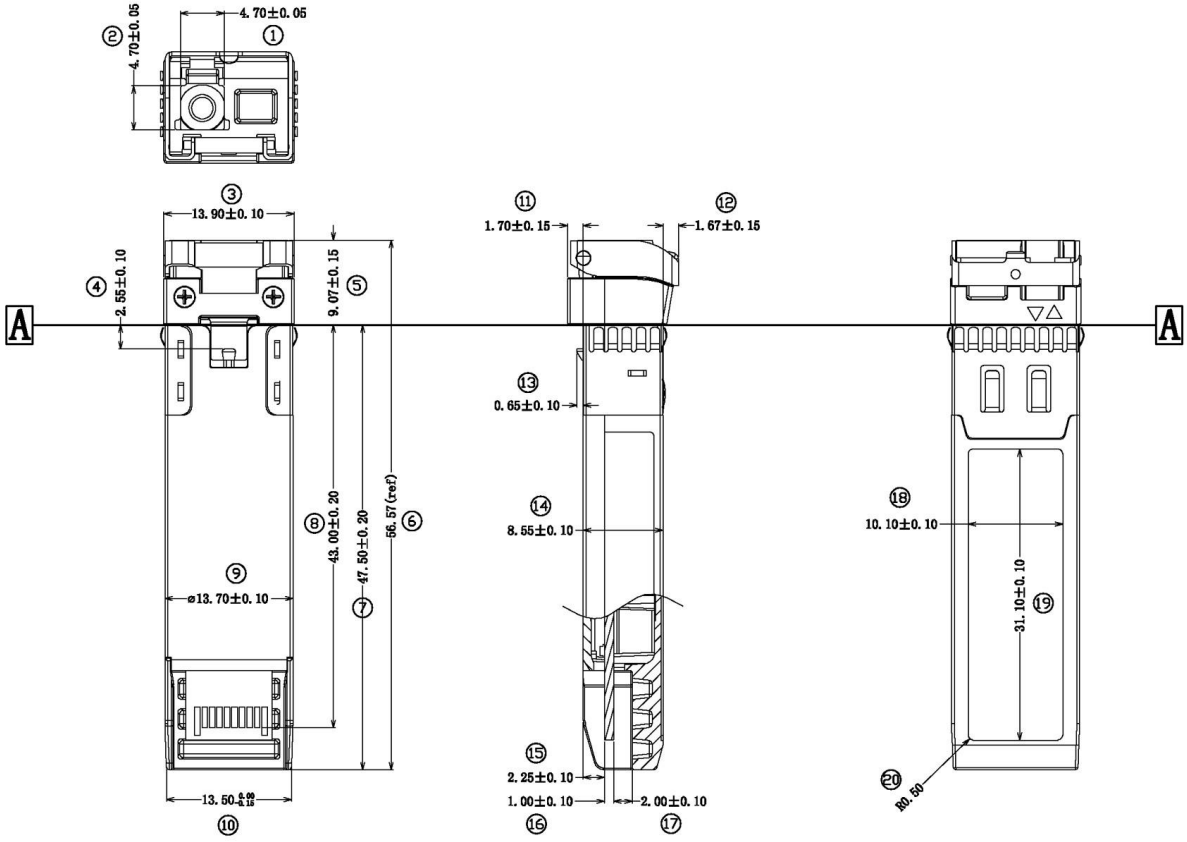

Specifications

Absolute Maximum Ratings

Parameter	Symbol	Min.	Typ.	Max.	Unit	Note
Storage Temperature	TS	-40		+85	℃	
Relative Humidity	RH	0		85	%	
Power Supply Voltage	VCC	-0.3		4	V	

Recommended Operating Conditions

Parameter	Symbol	Min.	Typ.	Max.	Unit	Note
Case Operating Temperature	T_c	0		+70	°C	Commercial
		-40		+85	°C	Industrial
Power Supply Voltage	VCC	3.14	3.3	3.46	V	
Bit Rate	BR	24.33	25.78		Gb/s	
Bit Error Ratio	BER			5×10^{-5}		
Max Supported Link Length	L			10	km	

Electrical Characteristics

Parameter	Symbol	Min.	Typ.	Max.	Unit	Note
Transmitter Section:						
Input Differential Impedance	RIN		100		Ω	
Single-ended Data Input Swing	VIN	90		450	mVp-p	
Transmit Disable Voltage	VDIS	2		VCCHOST	V	
Transmit Enable Voltage	VEN	VEE		VEE+0.8	V	
Transmit Fault Assert Voltage	VFA	2		VCCHOST	V	
Transmit Fault De-Assert Voltage	VFDA	VEE		VEE+0.4	V	
Receiver Section:						
Single-ended Data Output Swing	VOD	200		450	mVp-p	
LOS Fault	VLOSFT	2		VCCHOST	V	
LOS Normal	VLOSNR	VEE		VEE+0.4	V	

Optical Parameters (TA = -40 °C to +85 °C and VCC = 3.14 to 3.46 V)

Parameter	Symbol	Min.	Typ.	Max.	Unit	Note
Transmitter						
Center Wavelength	λ_c	1260	1270	1280	nm	TX 1270 nm
		1320	1330	1340	nm	TX 1330 nm
Average Output Power	Pav	-4		4	dBm	
Spectral Width (-20dB)				1	nm	
Extinction Ratio	ER	3.5			dB	
Side Mode Suppression Ratio	SMSR	30			dB	
Average Launch Power of OFF Transmitter	POFF			-30	dBm	
Relative Intensity Noise	RIN			-128	dB/Hz	
Receiver						
Optical Input Wavelength	λ_c	1320	1330	1340	nm	RX 1330 nm
		1260	1270	1280	nm	RX 1270 nm

Receiver Sensitivity (OMA)	RSENSE			-11	dBm	1
Receiver Overload (OMA)	Pmax	2			dBm	
Receiver Reflectance				-12	dB	
LOS Assert	LOSA	-30			dBm	
LOS De-Assert	LOSD			-17	dBm	
LOS Hysteresis		0.5			dB	

Note:

1. Measured at 25.78125 Gb/s, ER > 3.5 dB, PRBS 2^{31}-1, and BER ≤ 5×10^{-5}.

Recommended Circuit Schematic

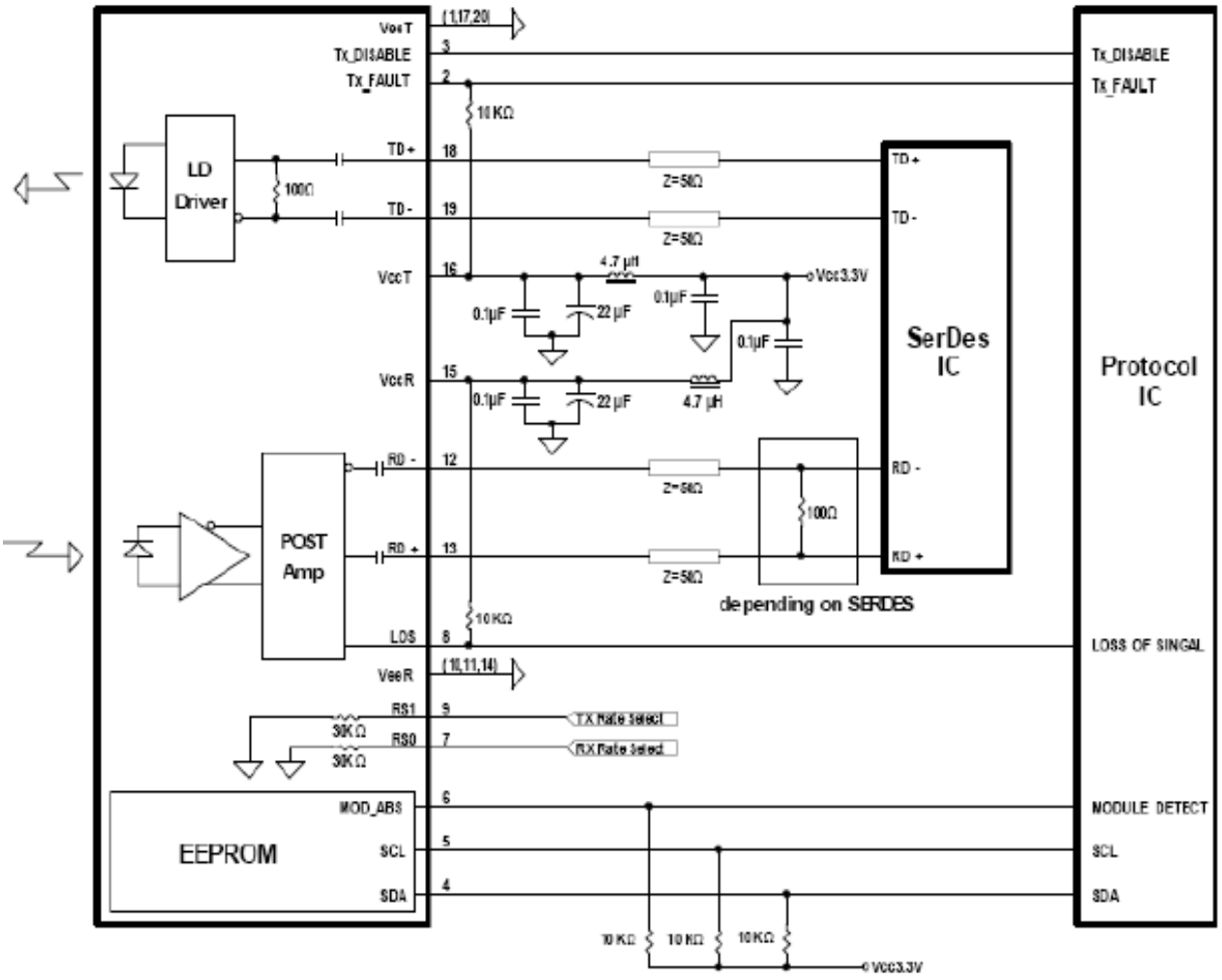

Pin Descriptions

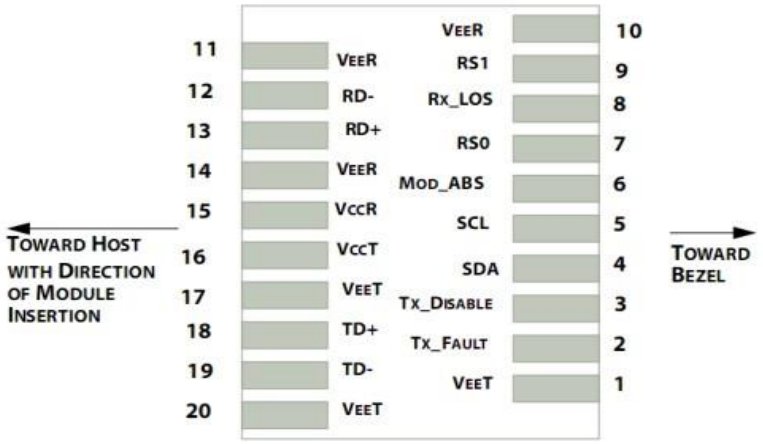

Pin	Symbol	Name	Description
1,17,20	VeeT	Transmitter Signal Ground	Connected to signal ground on the host board.
2	TX Fault	Transmitter Fault Out (OC)	Module transmitter fault output.
3	TX Disable	Transmitter Disable In (LVTTL)	Module transmitter disable control.
4	SDA	2-wire Serial Interface Data Line	Serial ID data line for SFF-8472 diagnostics. Should be pulled up to host VCC with 10 kΩ resistors.
5	SCL	2-wire Serial Interface Clock Line	Serial ID clock line for SFF-8472 diagnostics. Should be pulled up to host VCC with 10 kΩ resistors.
6	MOD-ABS	Module Absent	Grounded within the module to indicate module presence; should be pulled up to host VCC with 10 kΩ resistors.
7	RS0	Receiver Rate Select (LVTTL)	Rate select 0 (Rx): Low = CDR Bypass; High
8	LOS	Loss of Signal Out (OC)	Receiver loss of signal.
9	RS1	Transmitter Rate Select (LVTTL)	Rate select 1 (Tx): Low = CDR Bypass; High = CDR Select
10,11,14	VeeR	Receiver Signal Ground	Connected to signal ground on the host board.
12	RD-	Receiver Negative DATA Out (CML)	Receiver inverted data output, internally AC coupled and terminated.
13	RD+	Receiver Positive DATA Out (CML)	Receiver non-inverted data output, internally AC coupled and terminated.
15	VccR	Receiver Power Supply	Receiver power supply (+3.3 V).
16	VccT	Transmitter Power Supply	Transmitter power supply (+3.3 V).
18	TD+	Transmitter Positive DATA In (CML)	Transmitter non-inverted data input, internally AC coupled and terminated.
19	TD-	Transmitter Negative DATA In (CML)	Transmitter inverted data input, internally AC coupled and terminated.

Digital Diagnostic Functions

Parameter	Accuracy	Unit
Internally measured transceiver temperature	±3	°C
Internally measured transceiver supply voltage	±3	%
Measured Tx bias current	±10	%
Measured Tx output power	±3	dB
Measured Rx received average optical power	±3	dB

Ordering Information

Product Name	Product Description
S28-25G2733-10	S28-25G-2733-10 SFP28 25G BiDi, TX 1270 nm / RX 1330 nm, 10 km, LC, SMF, DDM, 0°C~+70°C
S28-25G3327-10	S28-25G-3327-10 SFP28 25G BiDi, TX 1330 nm / RX 1270 nm, 10 km, LC, SMF, DDM, 0°C~+70°C
S28-25G2733-10A	S28-25G-2733-10 SFP28 25G BiDi, TX 1270 nm / RX 1330 nm, 10 km, LC, SMF, DDM, -40°C~+85°C
S28-25G3327-10A	S28-25G-3327-10 SFP28 25G BiDi, TX 1330 nm / RX 1270 nm, 10 km, LC, SMF, DDM, -40°C~+85°C

Contact Information

Ascent Communication Technology Limited

AUSTRALIA
140 William Street, Melbourne

Victoria 3000, AUSTRALIA
Phone: +61-3-8691 2902

CHINA
Unit 1933, 600 Luban Road
200023, Shanghai CHINA
Phone: +86-21-60232616

EUROPE
Pfarrer-Bensheimer-Strasse 7a
55129 Mainz, GERMANY

Phone: +49 (0) 6136 926 3246

HONG KONG SAR
Room 1210, 12th Floor, Wing Tuck Commercial Centre
181 Wing Lok Street, Sheung Wan, HONG KONG
Phone: +852-2851 4722

USA
2710 Thomes Ave
Cheyenne, WY 82001, USA
Phone: +1-203 816 5188

VIETNAM
11th Floor, Hoa Binh Office Tower
106 Hoang Quoc Viet Street, Nghia Do Ward
Cau Giay District, Hanoi 10649, VIETNAM
Phone: +84 243 795 5917

WEB: www.ascentcomtec.com

EMAIL: sales@ascentcomtec.com

Specifications and product availability are subject to change without notice.
Copyright © 2022 Ascent Communication Technology Limited. All rights reserved.
Ver. ACT_S28-25G-XXXX-10_Datasheet_V1a_Apr_2022