40/100Gb/s QSFP28, Bi-Di, Duplex LC 100m Transceiver

QSFP28 Series

The QSFP28 Bi-Directional transceiver is a high-performance optical module designed for 40G and 100G Ethernet applications over multimode fiber. Supporting transmission distances of up to 70 m on OM3 and 100 m on OM4, the module enables cost-effective high-speed connectivity while allowing reuse of existing duplex LC fiber infrastructure, making it ideal for data center and enterprise network deployments.

The module utilizes dual-wavelength VCSEL technology (850 nm / 910 nm) with bi-directional transmission over a single LC fiber pair. Internally, it converts multiple electrical lanes into PAM4 2×50 Gb/s or NRZ channels, delivering an aggregate bandwidth of up to 100 Gb/s. The integrated clock and data recovery (CDR) ensures stable signal integrity, while the QSFP28 electrical interface complies with industry standards for seamless system integration.

Designed for high-density environments, the transceiver features low power consumption, hot-pluggable QSFP28 form factor, and digital diagnostic monitoring (DDM) for real-time performance visibility. With its compact design, reliable operation, and compatibility with existing cabling systems, the module provides an efficient solution for switch-to-switch interconnects, data aggregation, and high-speed optical links in modern data center and telecom networks.

Key Features

- Compliant to 40/100GbE XLPPI electrical specification per IEEE 802.3bm
- Aggregate bandwidth of > 100Gbps
- Over 70m transmission on OM3 Multimode Fiber (MMF) and 100m on OM4 MMF
- QSFP28 MSA compliant, duplex LC interface
- RoHS Compliant Part
- Wide operating temperature: 0°C~70°C

Specifications

Parameter	Symbol	Min.	Typ.	Max.	Unit
Operating Case Temperature	T_c	0		+70	°C
		-40		+85	°C
Power Supply Voltage	$V_{CC}T$, R	+3.13	3.3	+3.47	V
Power Supply Current	I_{CC}			1000	mA
Maximum Power Consumption	PD			3.5	W
Optical Wavelength CH1	λ	832	850	868	nm
Optical Wavelength CH2	λ	882	910	918	nm
Average Optical Power per Channel	Pavg	-6	-1	+4.0	dBm
Laser Off Power Per Channel	Poff			-30	dBm
Optical Center Wavelength CH1	λ	882	910	918	nm
Optical Center Wavelength CH2	λ	832	850	868	nm
Receiver Sensitivity per Channel	R			-8	dBm
Maximum Input Power	PMAX	+0.5			dBm
Transmit Input Diff Voltage	VI	120		1200	mV
Rx Output Diff Voltage	Vo		600	800	mV

Outline Diagram

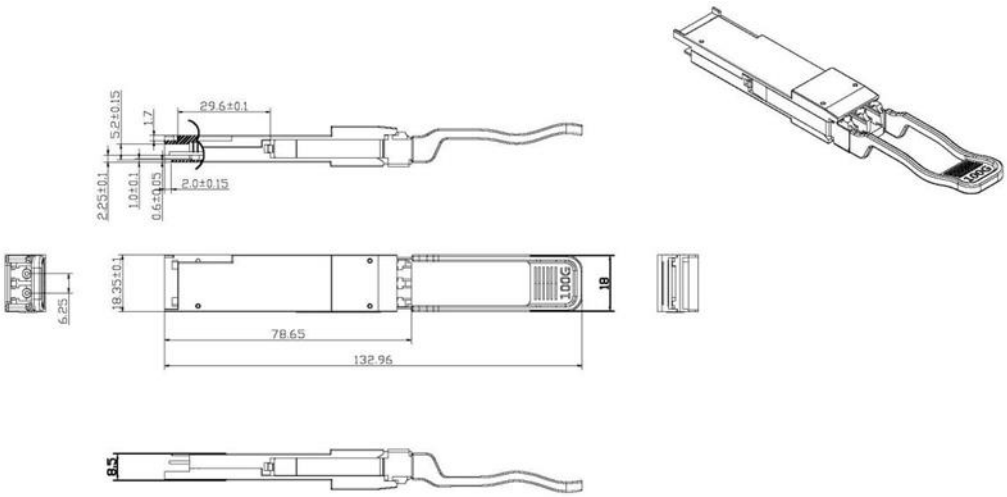

Ordering Information

Product Name	Product Description
QSFP-40/100-SRBD	QSFP28 SWDM4 SR BD 40/100GBASE-SM4 Dual Rate 850nm 100m DOM Duplex LC MMF

Ascent Communication Technology Ltd

AUSTRALIA
140 William Street, Melbourne
Victoria 3000, AUSTRALIA
Phone: +61-3-8691 2902

Hong Kong SAR
Room 1210, 12th Floor, Wing Tuck Commercial Centre
181 Wing Lok Street, Sheung Wan , Hong Kong SAR
Phone: +852-2851 4722

CHINA
Unit 1933, 600 Luban Road
200023, Shanghai, CHINA
Phone: +86-21-60232616

USA
2710 Thomes Ave
Cheyenne, WY 82001, USA
Phone: +1 203 350 9822

EUROPE
Pfarrer-Bensheimer-Strasse 7a
55129 Mainz, GERMANY
Phone: +49 (0) 6136 926 3246

VIETNAM
11th Floor, Hoa Binh Office Tower
106 Hoang Quoc Viet Street, Nghia Do Ward
Cau Giay District, Hanoi 10649, VIETNAM
Phone: +84-24-37955917

WEB: www.ascentcomtec.com

EMAIL: sales@ascentcomtec.com

Specifications and product availability are subject to change without notice.
Copyright © 2026 Ascent Communication Technology Limited. All rights reserved.
Ver. ACT_QSFP28-40100-SRBD_Overview_V1b_Jul_2022