40/100Gb/s QSFP28, Bi-Di, Duplex LC 100m Transceiver

QSFP28 Series

- **Compliant to QSFP28 SFF-8636 Specification and QSFP28 MSA**
- **Aggregate bandwidth of > 100Gbps**
- **Capable of over 70m transmission on OM3 MMF and 100m on OM4 MMF**
- **Single 3.3V power supply**
- **With digital diagnostic functions**
- **RoHS Compliant Part**

The QSFP28 Bi-Directional transceiver is a high-performance optical module designed for 40G and 100G Ethernet applications over multimode fiber. Supporting transmission distances of up to 70 m on OM3 and 100 m on OM4, the module enables cost-effective high-speed connectivity while allowing reuse of existing duplex LC fiber infrastructure, making it ideal for data center and enterprise network deployments.

The module utilizes dual-wavelength VCSEL technology (850 nm / 910 nm) with bi-directional transmission over a single LC fiber pair. Internally, it converts multiple electrical lanes into PAM4 2×50 Gb/s or NRZ channels, delivering an aggregate bandwidth of up to 100 Gb/s. The integrated clock and data recovery (CDR) ensures stable signal integrity, while the QSFP28 electrical interface complies with industry standards for seamless system integration.

Designed for high-density environments, the transceiver features low power consumption, hot-pluggable QSFP28 form factor, and digital diagnostic monitoring (DDM) for real-time performance visibility. With its compact design, reliable operation, and compatibility with existing cabling systems, the module provides an efficient solution for switch-to-switch interconnects, data aggregation, and high-speed optical links in modern data center and telecom networks.

Key Features

- Compliant to the 40/100GbE XLPPI electrical specification per IEEE 802.3bm
- Compliant to QSFP28 SFF-8636 Specification and QSFP28 MSA
- Aggregate bandwidth of > 100Gbps
- Dual wavelength VCSEL bi-directional optical interface, PAM4 2 × 50-Gb/s or NRZ 2x20G 850nm/910 nm
- Capable of over 70m transmission on OM3 Multimode Fiber (MMF) and 100m on OM4 MMF
- Single +3.3V power supply operating
- With digital diagnostic functions
- Temperature range 0°C to 70°C
- RoHS Compliant Part
- Utilizes a standard LC duplex fiber cable allowing reuse of existing cable infrastructure

Outline Diagram

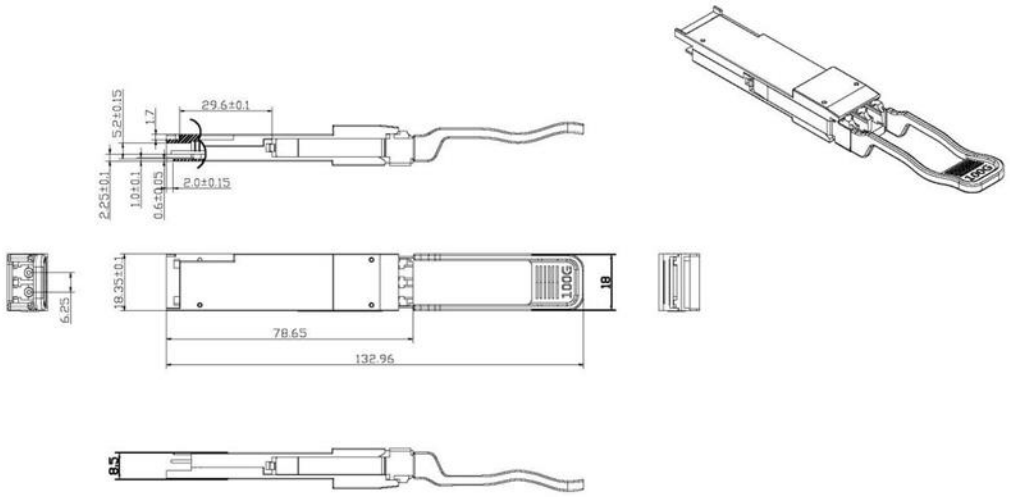

Transceiver Block Diagram

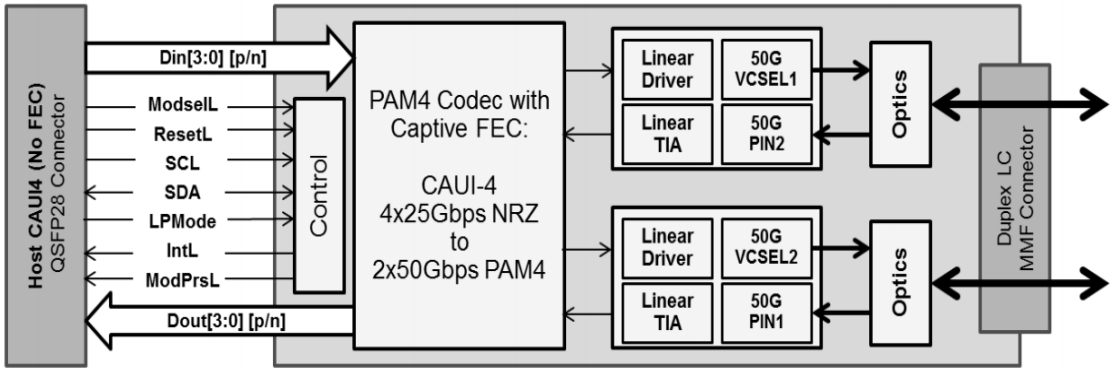

Recommended Power Supply Filter

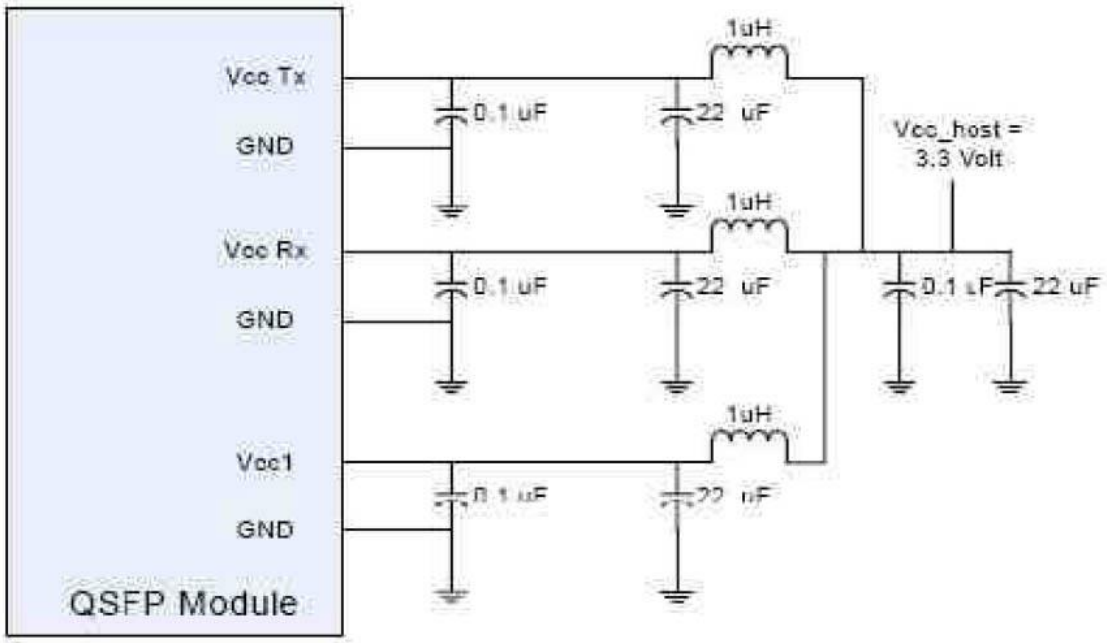

EEPROM Definitions

Address	Name	Description
128	Identifier(1 Byte)	Identifier type of serial transceiver
129	Ext. Identifier	Extended identifier of serial transceiver
130	Connector(1 Byte)	Code for connector type
131-138	Transceiver(8 bytes)	Code for electronic compatibility or optical compatibility
139	Encoding(1 Byte)	Code for serial encoding algorithm
140	BR, Nominal(1 Byte)	Normal bit rate, units of 100 Mbits/s
141	Extended Rate Select Compliance (1 Byte)	Tag for extended rate select compliance
142	Length SMF(1 Byte)	Link length supported for SM fiber in km
143	Length E-50µm(1 Byte)	Link length supported for EBW 50/125µm fiber, units of 2m
144	Length 50µm(1 Byte)	Link length supported for 50/125µm fiber, units of 1m
145	Length 62.5µm(1 Byte)	Link length supported for 62.5/125µm fiber, units of 1m
146	Length Copper(1 Byte)	Link length supported for copper, units of 1m
147	Device Tech(1 Byte)	Device technology
148-163	Vendor Name(16 Bytes)	QSFP vendor name(ASCII)
164	Extended Transceiver(1 Byte)	Extended transceiver codes for infiniband
165-167	Vendor OUI(3 Bytes)	QSFP vendor IEEE vendor company ID
168-183	Vendor PN(16 Bytes)	Part number provided by QSFP vendor(ASCII)
184-185	Vendor REV(2 Bytes)	Revision level for part number provided by vendor(ASCII)
186-187	Wavelength(2 Bytes)	Normal laser wavelength (wavelength = value/20 in nm)
188-189	Wavelength Tolerance(2 Bytes)	Guaranteed range of laser wavelength(+/- value) from norminal wavelength (wavelength tol. = value/200 in nm)
190	Max Case Temp(1 Byte)	Maximum case temperature in degrees C
191	CC_BASE(1 Byte)	Check code for base ID field(addresses 128-190)
192-195	Options(4 Bytes)	Rate select, TX disable, TX fault, LOS
196-211	Vendor SN(16 Bytes)	Serial number provided by vendor(ASCII)
212-219	Date Code(8 bytes)	Vendor's manufacturing date code
220	Diagnostic Monitoring Type(1 Byte)	Indicates which type of diagnostic monitoring is implemented
221	Enhanced Options(1 Byte)	Indicates which optional enhanced features are implemented
222	Reserved(1 Byte)	Reserved
223	CC_EXT	Check code for the extended ID fields (address 192-222)
224-255	Vendor Specific(32 Bytes)	Vendor specific EEPROM

Notes:

1. Page02 is User EEPROM and its format decided by user.
2. The detail description of low memory and page00.page03 upper memory please see SFF-8636 document.

Timing for Soft Control and Status Functions

Parameter	Symbol	Max	Unit	Conditions
Initialization Time	t_init	2000	ms	Time from power on1, hot plug or rising edge of Reset until the module is fully functional2
Reset Init Assert Time	t_reset_init	2	µs	A Reset is generated by a low level longer than the minimum reset pulse time present on the ResetL pin.
Serial Bus Hardware Ready Time	t_serial	2000	ms	Time from power on1 until module responds to data transmission over the 2-wire serial bus
Monitor Data Ready Time	t_data	2000	ms	Time from power on1 to data not ready, bit 0 of Byte 2, deasserted and IntL asserted
Reset Assert Time	t_reset	2000	ms	Time from rising edge on the ResetL pin until the module is fully functional2
LPMode Assert Time	ton_LPMode	100	µs	Time from assertion of LPMode (Vin:LPMode =Vih) until module power consumption enters lower Power Level
IntL Assert Time	ton_IntL	200	ms	Time from occurrence of condition triggering IntL until Vout:IntL = Vol
IntL Deassert Time	toff_IntL	500	µs	toff_IntL 500 µs Time from clear on read3 operation of associated flag until Vout:IntL = Voh. This includes deassert times for Rx LOS, Tx Fault and other flag bits.
Rx LOS Assert Time	ton_los	100	ms	Time from Rx LOS state to Rx LOS bit set and IntL asserted
Flag Assert Time	ton_flag	200	ms	Time from occurrence of condition triggering flag to associated flag bit set and IntL asserted
Mask Assert Time	ton_mask	100	ms	Time from mask bit set4 until associated IntL assertion is inhibited
Mask De-assert Time	toff_mask	100	ms	Time from mask bit cleared4 until associated IntlL operation resumes
ModSelL Assert Time	ton_ModSel L	100	µs	Time from assertion of ModSelL until module responds to data transmission over the 2-wire serial bus
ModSelL Deassert Time	toff_ModSel L	100	µs	Time from deassertion of ModSelL until the module does not respond to data transmission over the 2-wire serial bus
Power_over-ride or Power-set Assert Time	ton_Pdown	100	ms	Time from P_Down bit set 4 until module power consumption enters lower Power Level
Power_over-ride or Power-set De-assert Time	toff_Pdown	300	ms	Time from P_Down bit cleared4 until the module is fully functional3

Notes：

1. Power on is defined as the instant when supply voltages reach and remain at or above the minimum specified value.
2. Fully functional is defined as IntL asserted due to data not ready bit, bit 0 byte 2 de-asserted.
3. Measured from falling clock edge after stop bit of read transaction.
4. Measured from falling clock edge after stop bit of write transaction.

ESD

This transceiver is specified as ESD threshold 1kV for high speed data pins and 2kV for all other electrical input pins, tested per MIL-STD-883, Method 3015.4 /JESD22-A114-A (HBM). However, normal ESD precautions are still required during the handling of this module. This transceiver is shipped in ESD protective packaging. It should be removed from the packaging and handled only in an ESD protected environment.

Laser Safety

This is a Class 1 Laser Product according to EN 60825 -1:2014. This product complies with 21 CFR 1040.10 and 1040.11 except for deviations pursuant to Laser Notice No. 50, dated (June 24, 2007).
Caution: Use of controls or adjustments or performance of procedures other than those specified herein may result in hazardous radiation exposure.

Pin Assignment

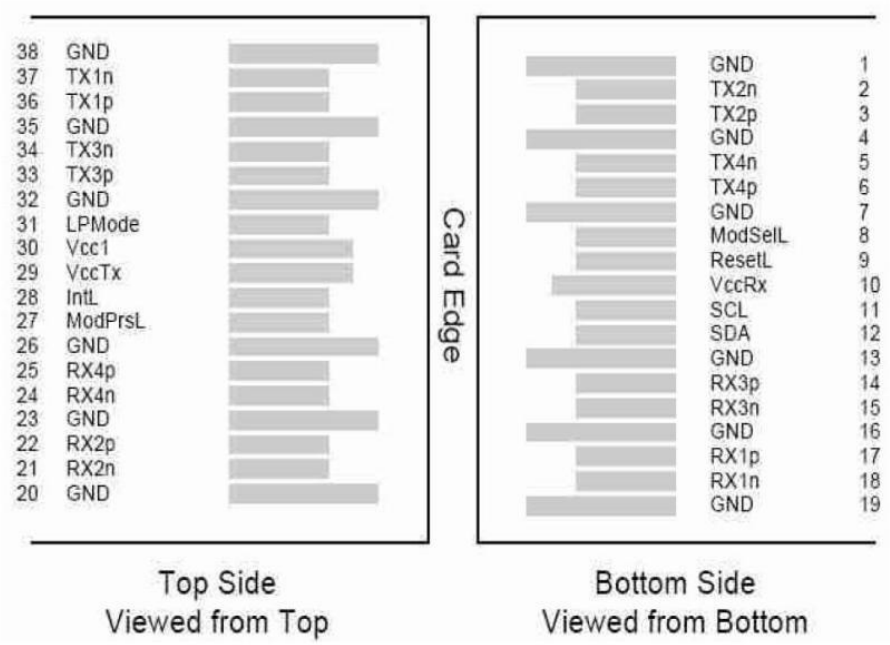

Pin	Logic	Symbol	Name/Description	Note
1		GND	Ground	1
2	CML-I	Tx2n	Transmitter Inverted Data Input	
3	CML-I	Tx2p	Transmitter Non-Inverted Data output	
4		GND	Ground	1
5	CML-I	Tx4n	Transmitter Inverted Data Output	
6	CML-I	Tx4p	Transmitter Non-Inverted Data Output	
7		GND	Ground	1
8	LVTTL-I	ModSelL	Module Select	
9	LVTTL-I	ResetL	Module Reset	
10		VccRx	+3.3V Power Supply Receiver	2
11	LVCMOS-I/O	SCL	2-Wire Serial Interface Clock	

Pin	Logic	Symbol	Name/Description	Note
12	LVCMOS-I/O	SDA	2-Wire Serial Interface Data	
13		GND	Ground	1
14	CML-O	Rx3p	Receiver Inverted Data Output	
15	CML-O	Rx3n	Receiver Non-Inverted Data Output	
16		GND	Ground	1
17	CML-O	Rx1p	Receiver Inverted Data Output	
18	CML-O	Rx1n	Receiver Non-Inverted Data Output	
19		GND	Ground	1
20		GND	Ground	1
21	CML-O	Rx2n	Receiver Inverted Data Output	
22	CML-O	Rx2p	Receiver Non-Inverted Data Output	
23		GND	Ground	1
24	CML-O	Rx4n	Receiver Inverted Data Output	
25	CML-O	Rx4p	Receiver Non-Inverted Data Output	
26		GND	Ground	1
27	LVTTL-O	ModPrsL	Module Present	
28	LVTTL-O	IntL	Interrupt	
29		VccTx	+3.3V Power Supply Transmitter	2
30		Vcc1	+3.3V Power Supply	2
31	LVTTL-I	LPMode	Low Power Mode	
32		GND	Ground	1
33	CML-I	Tx3p	Transmitter Inverted Data Output	
34	CML-I	Tx3n	Transmitter Non-Inverted Data Output	
35		GND	Ground	1
36	CML-I	Tx1p	Transmitter Inverted Data Output	
37	CML-I	Tx1n	Transmitter Non-Inverted Data Output	
38		GND	Ground	1

Notes:

1. GND is the symbol for signal and supply (power) common for QSFP+ modules. All are common within the QSFP+ module and all module voltages are referenced to this potential unless otherwise noted. Connect these directly to the host board signal common ground plane.

2. VccRx, Vcc1 and VccTx are the receiving and transmission power suppliers and shall be applied concurrently. Recommended host board power supply filtering is shown below. Vcc Rx, Vcc1 and Vcc Tx may be internally connected within the QSFP+ transceiver module in any combination. The connector pins are each rated for a maximum current of 500 mA.

Specifications

Absolute Maximum Ratings

Parameter	Symbol	Min.	Max.	Unit
Storage Temperature	T_S	-40	+85	°C
Supply Voltage	$V_{CC}T$, R	-0.5	4.0	V
Relative Humidity	RH	0	85	%

Recommended Operating Conditions

Parameter	Symbol	Min.	Typ.	Max.	Unit
Operating Case Temperature	T_C	0		+70	°C
Power Supply Voltage	$V_{CC}T$, R	+3.13	3.3	+3.47	V
Power Supply Current	I_{CC}			1000	mA
Max Power Consumption	PD			3.5	W

Optical Characteristics

Parameter	Symbol	Min.	Typ.	Max.	Unit	Note
Transmitter						
Optical Wavelength CH1	λ	832	850	868	nm	
Optical Wavelength CH2	λ	882	910	918	nm	
RMS Spectral Width	Pm		0.5	0.65	nm	
Average Optical Power per Channel	Pavg	-6	-1	+4.0	dBm	
Laser Off Power Per Channel	Poff			-30	dBm	
Optical Extinction Ratio	ER	3.0			dB	
Relative Intensity Noise	Rin			-128	dB/HZ	1
Optical Return Loss Tolerance				12	dB	
Receiver						
Optical Center Wavelength CH1	λ	882	910	918	nm	
Optical Center Wavelength CH2	λ	832	850	868	nm	
Receiver Sensitivity per Channel	R			-8	dBm	
Maximum Input Power	PMAX	+0.5			dBm	
Receiver Reflectance	Rrx			-15	dB	
LOS De-Assert	LOSD			-10	dBm	
LOS Assert	LOSA	-30			dBm	
LOS Hysteresis	LOSH	0.5			dB	

Note 1: 12dB Reflection.

Electrical Characteristics (T_{OP} = 0 to 70 °C, V_{CC} = 3.13 to 3.47 Volts)

Parameter	Symbol	Min.	Typ.	Max.	Unit	Note
Data Rate per Channel			25.78125/ 10.3125		Gbps	
Power Consumption		-	2.5	3.5	W	
Supply Current	Icc		0.75	1.0	A	
Control I/O Voltage-High	VIH	2.0		Vcc	V	
Control I/O Voltage-Low	VIL	0		0.7	V	
Inter-Channel Skew	TSK			150	Ps	
RESETL Duration			10		Us	
RESETL De-assert time				100	ms	

Parameter	Symbol	Min.	Typ.	Max.	Unit	Note
Power On Time				100	ms	
Transmitter						
Single Ended Output Voltage Tolerance		0.3		4	V	1
Common mode Voltage Tolerance		15			mV	
Transmit Input Diff Voltage	VI	120		1200	mV	
Transmit Input Diff Impedance	ZIN	80	100	120		
Data Dependent Input Jitter	DDJ			0.1	UI	
Data Input Total Jitter	TJ			0.28	UI	
Receiver						
Single Ended Output Voltage Tolerance		0.3		4	V	
Rx Output Diff Voltage	Vo		600	800	mV	
Rx Output Rise and Fall Voltage	Tr/Tf	12			ps	1
Total Jitter	TJ			0.7	UI	
Deterministic Jitter	DJ			0.42	UI	

Notes1: 20 to 80%.

Ordering Information

Product Name	Product Description
QSFP-40/100-SRBD	QSFP28 SWDM4 SR BD 40/100GBASE-SM4 Dual Rate 850nm 100m DOM Duplex LC MMF

Contact Information

Ascent Communication Technology Ltd

AUSTRALIA
140 William Street, Melbourne
Victoria 3000, AUSTRALIA
Phone: +61-3-8691 2902

Hong Kong SAR
Room 1210, 12th Floor, Wing Tuck Commercial Centre
181 Wing Lok Street, Sheung Wan , Hong Kong SAR
Phone: +852-2851 4722

CHINA
Unit 1933, 600 Luban Road
200023, Shanghai, CHINA
Phone: +86-21-60232616

USA
2710 Thomes Ave
Cheyenne, WY 82001, USA
Phone: +1 203 350 9822

EUROPE
Pfarrer-Bensheimer-Strasse 7a
55129 Mainz, GERMANY
Phone: +49 (0) 6136 926 3246

VIETNAM
11th Floor, Hoa Binh Office Tower
106 Hoang Quoc Viet Street, Nghia Do Ward
Cau Giay District, Hanoi 10649, VIETNAM
Phone: +84-24-37955917

WEB: www.ascentcomtec.com

EMAIL: sales@ascentcomtec.com

Specifications and product availability are subject to change without notice.
Copyright © 2026 Ascent Communication Technology Limited. All rights reserved.
Ver. ACT_QSFP28-40100-SRBD_Datasheet_V1b_Jul_2022