100 Gb/s 100 m QSFP28 SR4 Transceiver

QSFP Series

- **Hot-pluggable QSFP28 MSA form factor**
- **Compatible with Ethernet 100GBASE-SR4**
- **Supports up to 103.1 Gb/s aggregate bit rate**
- **Up to 100 m reach on OM4 multimode fiber (70 m on OM3)**
- **Single +3.3 V power supply**
- **Power consumption <2.0W**

Ascent's QSFP28-100G-SR01 is a 100Gb/s transceiver module designed for optical communication applications compliant to IEEE 802.3bm standards.

The optical transmitter portion of the transceiver incorporates a 4-channel VCSEL (Vertical Cavity Surface Emitting Laser) array, a 4-channel input buffer and laser driver, diagnostic monitors, control and bias blocks. For module control, the control interface incorporates a Two Wire Serial interface of clock and data signals. Diagnostic monitors for VCSEL bias, module temperature, transmitted optical power, received optical power and supply voltage are implemented and results are available through the TWS interface.

The optical receiver portion of the transceiver incorporates a 4-channel PIN photodiode array, a 4-channel TIA array, a 4-channel output buffer, diagnostic monitors, and control and bias blocks. Diagnostic monitors for optical input power are implemented and results are available through the TWS interface.

The product is designed with form factor, optical/electrical connection and digital diagnostic interface according to the QSFP+ Multi-Source Agreement (MSA). It has been designed to meet the harshest external operating conditions including temperature, humidity and EMI interference.

Key Features

- Hot pluggable QSFP28 MSA form factor
- Compliant to Ethernet 100GBASE-SR4
- Supports 103.1 Gb/s aggregate bit rate
- Up to 100 m reach with OM4 multimode fiber
- Up to 70 m reach with OM3 multimode fiber
- Single +3.3V power supply
- Operating case temperature: 0 °C to 70 °C
- Power consumption <2.0W
- High reliability 850 nm VCSEL technology
- Standard 12 lane with MPO male connector
- Compliant with SFF-8636
- RoHS and FCC compliant
- Support BER 10^{-12}

Outline Dimensions

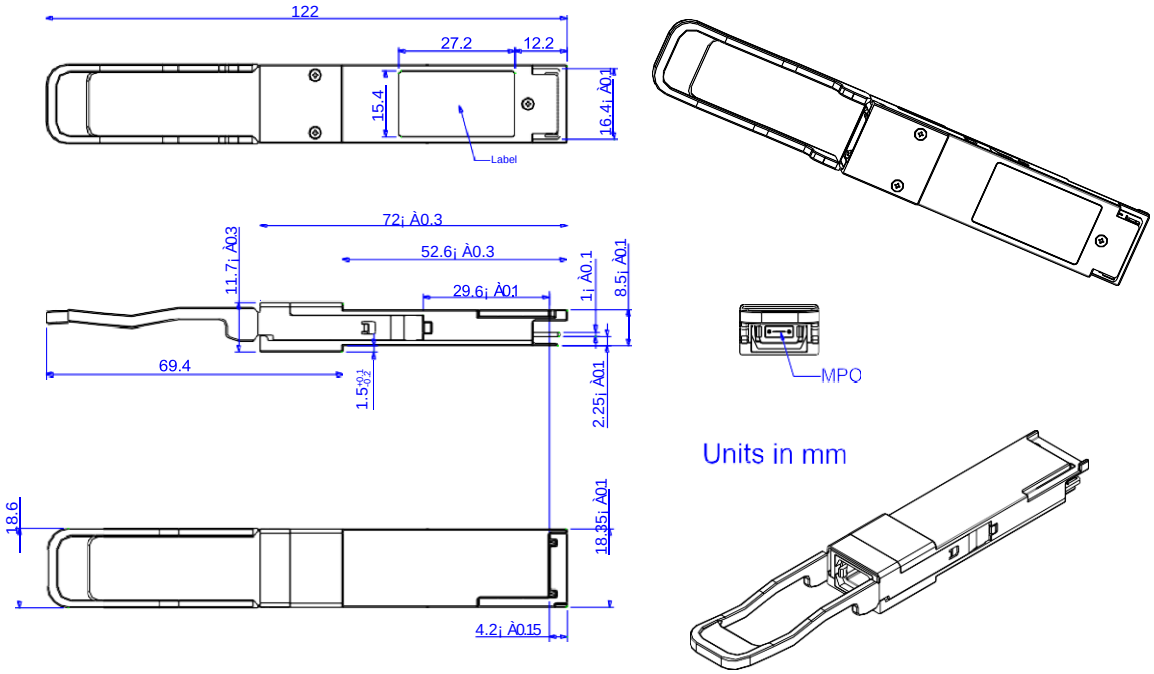

Host-Transceiver Block Diagram

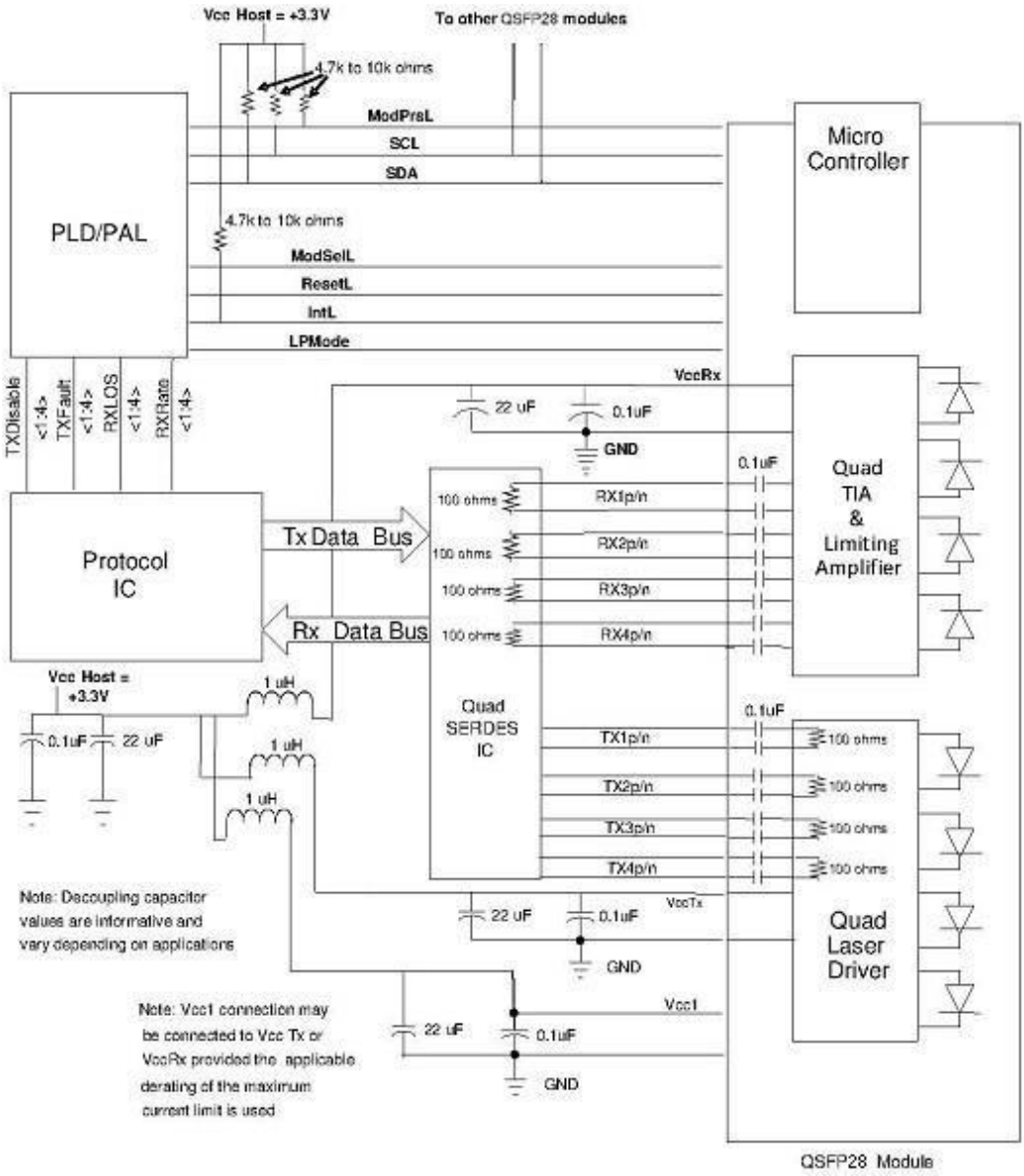

Digital Diagnostic Functions

ASCENT's QSFP28-100G-SR01 supports the 2-wire serial communication protocol as defined in the QSFP28 MSA., which allows real-time access to the following operating parameters:

- Transceiver temperature
- Laser bias current
- Transmitted optical power
- Received optical power
- Transceiver supply voltage

It also access and monitor module information (ex: Media type, Vendor name, Part Number, Serial Number, Wavelength, Voltage, temperature, etc), provides a sophisticated system of alarm and warning flags, which may be used to alert end-users when particular operating parameters are outside of a factory-set normal range.

The operating and diagnostics information is monitored and reported by a Digital Diagnostics Transceiver Controller inside the transceiver, which is accessed through the 2-wire serial interface. When the serial protocol is activated, the serial clock signal (SCL pin) is generated by the host. The positive edge clocks data into the QSFP28 transceiver into those segments of its memory map that are not write-protected. The negative edge clocks data from the QSFP28 transceiver. The serial data signal (SDA pin) is bi-directional for serial data transfer. The host uses SDA in conjunction with SCL to mark the start and end of serial protocol activation. The memories are organized as a series of 8-bit data words that can be addressed individually or sequentially. The 2-wire serial interface provides sequential or random access to the 8 bit parameters, addressed from 00h to the maximum address of the memory.

This clause defines the Memory Map for QSFP28 transceiver used for serial ID, digital monitoring and certain control functions. The interface is mandatory for all QSFP28 devices. The memory map has been changed in order to accommodate 4 optical channels and limit the required memory space. The structure of the memory is shown in below figure-QSFP28 Memory Map. The memory space is arranged into a lower, single page, address space of 128 bytes and multiple upper address space pages. This structure permits timely access to addresses in the lower page, e.g. Interrupt Flags and Monitors. Less time critical entries, e.g. serial ID information and threshold settings, are available with the Page Select function. The structure also provides address expansion by adding additional upper pages as needed. For example, in below figure upper pages 01 and 02 are optional. Upper page 01 allows implementation of Application Select Table, and upper page 02 provides user read/write space. The lower page and upper pages 00 and 03 are always implemented. The interface address used is A0xh and is mainly used for time critical data like interrupt handling in order to enable a "one-time-read" for all data related to an interrupt situation. After an Interrupt, IntL, has been asserted, the host can read out the flag field to determine the effected channel and type of flag.

For more detailed information including memory map definitions, please see the QSFP28 MSA Specification.

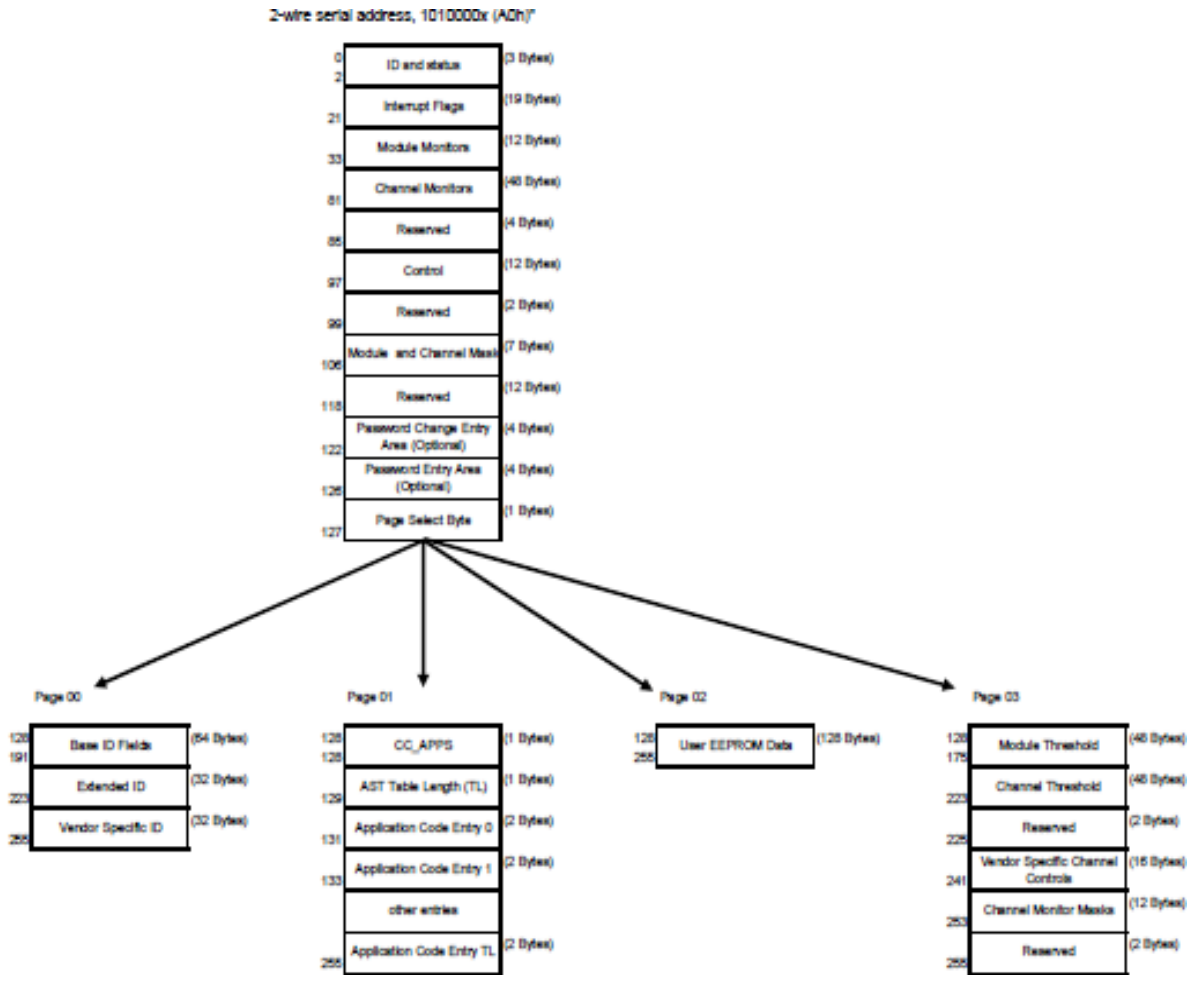

Lower Memory Map

The lower 128 bytes of the 2-wire serial bus address space, see below table, is used to access a variety of measurements and diagnostic functions, a set of control functions, and a means to select which of the various upper memory map pages are accessed on subsequent reads. This portion of the address space is always directly addressable and thus is chosen for monitoring and control functions that may need to be repeatedly accessed. The definition of identifier field is the same as page 00h Byte 128.

Byte Address	Description	Type
0	Identifier (1 Byte)	Read-Only
1-2	Status (2 Bytes)	Read-Only
3-21	Interrupt Flags (19 Bytes)	Read-Only
22-33	Module Monitors (12 Bytes)	Read-Only
34-81	Channel Monitors (48 Bytes)	Read-Only
82-85	Reserved (4 Bytes)	Read-Only
86-97	Control (12 Bytes)	Read/Write
98-99	Reserved (2 Bytes)	Read/Write
100-106	Module and Channel Masks (7 Bytes)	Read/Write
107-118	Reserved (12 Bytes)	Read/Write
119-122	Password Change Entry Area (optional) (4 Bytes)	Read/Write
123-126	Password Entry Area (optional) (4 Bytes)	Read/Write
127	Page Select Byte	Read/Write

Status Indicator Bits

The Status Indicators are defined in below table.

Byte	Bit	Name	Description
1	All	Revision Compliance	00h: Revision not specified. Do not use for SFF-8636 rev 2.5 or Higher; 01h: SFF-8436 Rev 4.8 or earlier; 02h: Includes functionality described in revision 4.8 or earlier of SFF-8436, except that this byte and Bytes 186-189 are as defined in this document; 03h: SFF-8636 Rev 1.3 or earlier; 04h: SFF-8636 Rev 1.4; 05h: SFF-8636 Rev 1.5; 06h: SFF-8636 Rev 2.0; 07h: SFF-8636 Rev 2.5, 2.6 and 2.7; 08-FFh: 08-FFh Unallocated
2	7	Reserved	
	6	Reserved	
	5	Reserved	
	4	Reserved	
	3	Reserved	
	2	Flat_mem	Upper memory flat or paged.Flat memory: 0= paging, 1= Page 00h only
	1	IntL	Digital state of the IntL Interrupt output pin (if pin supported)
	0	Data_Not_Ready	Indicates free-side has not yet achieved power up and monitor data is not ready. Bit remains high until data is ready to be read at which time the device sets the bit low.

Interrupt Flags

A portion of the memory map (Bytes 3 through 21), form a flag field. Within this field, the status of LOS and Tx Fault as well as alarms and warnings for the various monitored items is reported. For normal operation and default state, the bits in this field have the value of 0b. For the defined conditions of LOS, Tx Fault, module and channel alarms and warnings, the appropriate bit or bits are set, value = 1b. Once asserted, the bits remained set (latched) until cleared by a read operation that includes the affected bit or reset by the ResetL pin. The Channel Status Interrupt Flags are defined in below table.

Byte	Bit	Name	Description
3	7	L-Tx4 LOS	Latched TX LOS indicator, channel 4 (Not support)
	6	L-Tx3 LOS	Latched TX LOS indicator, channel 3 (Not support)
	5	L-Tx2 LOS	Latched TX LOS indicator, channel 2 (Not support)
	4	L-Tx1 LOS	Latched TX LOS indicator, channel 1 (Not support)
	3	L-Rx4 LOS	Latched RX LOS indicator, channel 4
	2	L-Rx3 LOS	Latched RX LOS indicator, channel 3
	1	L-Rx2 LOS	Latched RX LOS indicator, channel 2
	0	L-Rx1 LOS	Latched RX LOS indicator, channel 1
4	7	L-Tx4 Adapt EQ Fault	Latched TX, Adaptive EQ fault indicator, channel 4 (if supported)
	6	L-Tx3 Adapt EQ Fault	Latched TX, Adaptive EQ fault indicator, channel 3 (if supported)
	5	L-Tx2 Adapt EQ Fault	Latched TX, Adaptive EQ fault indicator, channel 2 (if supported)
	4	L-Tx1 Adapt EQ Fault	Latched TX, Adaptive EQ fault indicator, channel 1 (if supported)

Byte	Bit	Name	Description
	3	L-Tx4 Fault	Latched TX Transmitter/Laser fault indicator, channel 4
	2	L-Tx3 Fault	Latched TX Transmitter/Laser fault indicator, channel 3
	1	L-Tx2 Fault	Latched TX Transmitter/Laser fault indicator, channel 2
	0	L-Tx1 Fault	Latched TX Transmitter/Laser fault indicator, channel 1
5	7	L-Tx4 LOL	Latched TX CDR LOL indicator, ch 4
	6	L-Tx3 LOL	Latched TX CDR LOL indicator, ch 3
	5	L-Tx2 LOL	Latched TX CDR LOL indicator, ch 2
	4	L-Tx1 LOL	Latched TX CDR LOL indicator, ch 1
	3	L-Rx4 LOL	Latched RX CDR LOL indicator, ch 4
	2	L-Rx3 LOL	Latched RX CDR LOL indicator, ch 3
	1	L-Rx2 LOL	Latched RX CDR LOL indicator, ch 2
	0	L-Rx1 LOL	Latched RX CDR LOL indicator, ch 1

The Module Monitor Interrupt Flags are defined in below table.

Byte	Bit	Name	Description
6	7	L-Temp High Alarm	Latched high temperature alarm
	6	L-Temp Low Alarm	Latched low temperature alarm
	5	L-Temp High Warning	Latched high temperature warning
	4	L-Temp Low Warning	Latched low temperature warning
	3-1	Reserved	
	0	Initialization complete flag	Asserted (one) after initialization and/or reset has completed. Returns to Zero when read. See Table 6-25 for the Initialization Complete Implemented bit.
7	7	L-Vcc High Alarm	Latched high supply voltage alarm
	6	L-Vcc Low Alarm	Latched low supply voltage alarm
	5	L-Vcc High Warning	Latched high supply voltage warning
	4	L-Vcc Low Warning	Latched low supply voltage warning
	3-0	Reserved	
8	All	Vendor Specific	

The Channel Monitor Interrupt Flags are defined in below table.

Byte	Bit	Name	Description
9	7	L-Rx1 Power High Alarm	Latched high RX power alarm, channel 1
	6	L-Rx1 Power Low Alarm	Latched low RX power alarm, channel 1
	5	L-Rx1 Power High Warning	Latched high RX power warning, channel 1
	4	L-Rx1 Power Low Warning	Latched low RX power warning, channel 1
	3	L-Rx2 Power High Alarm	Latched high RX power alarm, channel 2
	2	L-Rx2 Power Low Alarm	Latched low RX power alarm, channel 2
	1	L-Rx2 Power High Warning	Latched high RX power warning, channel 2

Byte	Bit	Name	Description
	0	L-Rx2 Power Low Warning	Latched low RX power warning, channel 2
10	7	L-Rx3 Power High Alarm	Latched high RX power alarm, channel 3
	6	L-Rx3 Power Low Alarm	Latched low RX power alarm, channel 3
	5	L-Rx3 Power High Warning	Latched high RX power warning, channel 3
	4	L-Rx3 Power Low Warning	Latched low RX power warning, channel 3
	3	L-Rx4 Power High Alarm	Latched high RX power alarm, channel 4
	2	L-Rx4 Power Low Alarm	Latched low RX power alarm, channel 4
	1	L-Rx4 Power High Warning	Latched high RX power warning, channel 4
	0	L-Rx4 Power Low Warning	Latched low RX power warning, channel 4
11	7	L-Tx1 Bias High Alarm	Latched high TX bias alarm, channel 1
	6	L-Tx1 Bias Low Alarm	Latched low TX bias alarm, channel 1
	5	L-Tx1 Bias High Warning	Latched high TX bias warning, channel 1
	4	L-Tx1 Bias Low Warning	Latched low TX bias warning, channel 1
	3	L-Tx2 Bias High Alarm	Latched high TX bias alarm, channel 2
	2	L-Tx2 Bias Low Alarm	Latched low TX bias alarm, channel 2
	1	L-Tx2 Bias High Warning	Latched high TX bias warning, channel 2
	0	L-Tx2 Bias Low Warning	Latched low TX bias warning, channel 2
12	7	L-Tx3 Bias High Alarm	Latched high TX bias alarm, channel 3
	6	L-Tx3 Bias Low Alarm	Latched low TX bias alarm, channel 3
	5	L-Tx3 Bias High Warning	Latched high TX bias warning, channel 3
	4	L-Tx3 Bias Low Warning	Latched low TX bias warning, channel 3
	3	L-Tx4 Bias High Alarm	Latched high TX bias alarm, channel 4
	2	L-Tx4 Bias Low Alarm	Latched low TX bias alarm, channel 4
	1	L-Tx4 Bias High Warning	Latched high TX bias warning, channel 4
	0	L-Tx4 Bias Low Warning	Latched low TX bias warning, channel 4
13	7	L-Tx1 Power High Alarm	Latched high TX Power alarm, channel 1
	6	L-Tx1 Power Low Alarm	Latched low TX Power alarm, channel 1
	5	L-Tx1 Power High Warning	Latched high TX Power warning, channel 1

Byte	Bit	Name	Description
	4	L-Tx1 Power Low Warning	Latched low TX Power warning, channel 1
	3	L-Tx2 Power High Alarm	Latched high TX Power alarm, channel 2
	2	L-Tx2 Power Low Alarm	Latched low TX Power alarm, channel 2
	1	L-Tx2 Power High Warning	Latched high TX Power warning, channel 2
	0	L-Tx2 Power Low Warning	Latched low TX Power warning, channel 2
14	7	L-Tx3 Power High Alarm	Latched high TX Power alarm, channel 3
	6	L-Tx3 Power Low Alarm	Latched low TX Power alarm, channel 3
	5	L-Tx31 Power High Warning	Latched high TX Power warning, channel 3
	4	L-Tx3 Power Low Warning	Latched low TX Power warning, channel 3
	3	L-Tx4 Power High Alarm	Latched high TX Power alarm, channel 4
	2	L-Tx4 Power Low Alarm	Latched low TX Power alarm, channel 4
	1	L-Tx4 Power High Warning	Latched high TX Power warning, channel 4
	0	L-Tx4 Power Low Warning	Latched low TX Power warning, channel 4
15-16	All	Reserved	Reserved channel monitor flags, set 4
17-18	All	Reserved	Reserved channel monitor flags, set 5
19-20	All	Vendor Specific	Reserved channel monitor flags, set 6
21	All	Vendor Specific	

Module Monitors

Real time monitoring for the QSFP28 module include transceiver temperature, transceiver supply voltage, and monitoring for each transmit and receive channel. Measured parameters are reported in 16-bit data fields, i.e., two concatenated bytes. These are shown in below table.

Byte	Bit	Name	Description
22	All	Temperature MSB	Internally measured module temperature
23	All	Temperature LSB	
24-25	All	Reserved	
26	All	Supply Voltage MSB	Internally measured module supply voltage
27	All	Supply Voltage LSB	
28-29	All	Reserved	
30-33	All	Vendor Specific	

Channel Monitoring

Real time channel monitoring is for each transmit and receive channel and includes optical input power , Tx bias current and Tx output Power. Measurements are calibrated over vendor specified operating temperature and voltage and should be interpreted as defined below. Alarm and warning threshold values should be interpreted in the same manner as real time 16-bit data.Below table defines the Channel Monitoring.

Byte	Bit	Name	Description
34	All	Rx1 Power MSB	Internally measured RX input power, channel 1
35	All	Rx1 Power LSB	
36	All	Rx2 Power MSB	Internally measured RX input power, channel 2
37	All	Rx2 Power LSB	
38	All	Rx3 Power MSB	Internally measured RX input power, channel 3
39	All	Rx3 Power LSB	
40	All	Rx4 Power MSB	Internally measured RX input power, channel 4
41	All	Rx4 Power LSB	
42	All	Tx1 Bias MSB	Internally measured TX bias, channel 1
43	All	Tx1 Bias LSB	
44	All	Tx2 Bias MSB	Internally measured TX bias, channel 2
45	All	Tx2 Bias LSB	
46	All	Tx3 Bias MSB	Internally measured TX bias, channel 3
47	All	Tx3 Bias LSB	
48	All	Tx4 Bias MSB	Internally measured TX bias, channel 4
49	All	Tx4 Bias LSB	
50	All	Tx1 Power MSB	Internally measured TX output power, channel 1
51	All	Tx1 Power LSB	
52	All	Tx2 Power MSB	Internally measured TX output power, channel 2
53	All	Tx2 Power LSB	
54	All	Tx3 Power MSB	Internally measured TX output power, channel 3
55	All	Tx3 Power LSB	
56	All	Tx4 Power MSB	Internally measured TX output power, channel 4
57	All	Tx4 Power LSB	
58-65			Reserved channel monitor set 4
66-73			Reserved channel monitor set 5
74-81		Vendor Specific	

Control Bytes

Control Bytes are defined in below table.

Byte	Bit	Name	Description
86	7-4	Reserved	
	3	Tx4_Disable	Read/write bit that allows software disable of transmitters
	2	Tx3_Disable	Read/write bit that allows software disable of transmitters
	1	Tx2_Disable	Read/write bit that allows software disable of transmitters
	0	Tx1_Disable	Read/write bit that allows software disable of transmitters
87	7	Rx4_Rate_Select	Software Rate Select, Rx channel 4 msb
	6	Rx4_Rate_Select	Software Rate Select, Rx channel 4 lsb
	5	Rx3_Rate_Select	Software Rate Select, Rx channel 3 msb
	4	Rx3_Rate_Select	Software Rate Select, Rx channel 3 lsb
	3	Rx2_Rate_Select	Software Rate Select, Rx channel 2 msb
	2	Rx2_Rate_Select	Software Rate Select, Rx channel 2 lsb
	1	Rx1_Rate_Select	Software Rate Select, Rx channel 1 msb
	0	Rx1_Rate_Select	Software Rate Select, Rx channel 1 lsb
88	7	Tx4_Rate_Select	Software Rate Select, Tx channel 4 msb (Not support)
	6	Tx4_Rate_Select	Software Rate Select, Tx channel 4 lsb (Not support)

Byte	Bit	Name	Description
	5	Tx3_Rate_Select	Software Rate Select, Tx channel 3 msb (Not support)
	4	Tx3_Rate_Select	Software Rate Select, Tx channel 3 lsb (Not support)
	3	Tx2_Rate_Select	Software Rate Select, Tx channel 2 msb (Not support)
	2	Tx2_Rate_Select	Software Rate Select, Tx channel 2 lsb (Not support)
	1	Tx1_Rate_Select	Software Rate Select, Tx channel 1 msb (Not support)
	0	Tx1_Rate_Select	Software Rate Select, Tx channel 1 lsb (Not support)
89	All	Rx4_Application_Select	Software Application Select per SFF-8079, Rx Channel 4
90	All	Rx3_Application_Select	Software Application Select per SFF-8079, Rx Channel 3
91	All	Rx2_Application_Select	Software Application Select per SFF-8079, Rx Channel 2
92	All	Rx1_Application_Select	Software Application Select per SFF-8079, Rx Channel 1
93	7-3	Reserved	
	2	High Power Class Enable (Classes 5-7)	When set (= 1b) enables Power Classes 5 to 7 in Byte 129 to exceed 3.5W. When cleared (=0b), modules with power classes 5 to 7 must dissipate less than 3.5W (but are not required to be fully functional). Default 0.
	1	Power_set	Power set to low power mode. Default 0.
	0	Power_over-ride	Override of LPMode signal setting the power mode with software.
94	All	Tx4_Application_Select	Software Application Select per SFF-8079, Tx Channel 4 (Not support)
95	All	Tx3_Application_Select	Software Application Select per SFF-8079, Tx Channel 3 (Not support)
96	All	Tx2_Application_Select	Software Application Select per SFF-8079, Tx Channel 2 (Not support)
97	All	Tx1_Application_Select	Software Application Select per SFF-8079, Tx Channel 1 (Not support)
98	7	Tx4_CDR_control	Channel 4 TX CDR Control (1b = CDR on, 0b = CDR off)
	6	Tx3_CDR_control	Channel 3 TX CDR Control (1b = CDR on, 0b = CDR off)
	5	Tx2_CDR_control	Channel 2 TX CDR Control (1b = CDR on, 0b = CDR off)
	4	Tx1_CDR_control	Channel 1 TX CDR Control (1b = CDR on, 0b = CDR off)
	3	Rx4_CDR_control	Channel 4 RX CDR Control(1b = CDR on, 0b = CDR off)
	2	Rx3_CDR_control	Channel 3 RX CDR Control(1b = CDR on, 0b = CDR off)
	1	Rx2_CDR_control	Channel 2 RX CDR Control(1b = CDR on, 0b = CDR off)
	0	Rx1_CDR_control	Channel 1 RX CDR Control(1b = CDR on, 0b = CDR off)
99	All	Reserved	

Pin Assignment

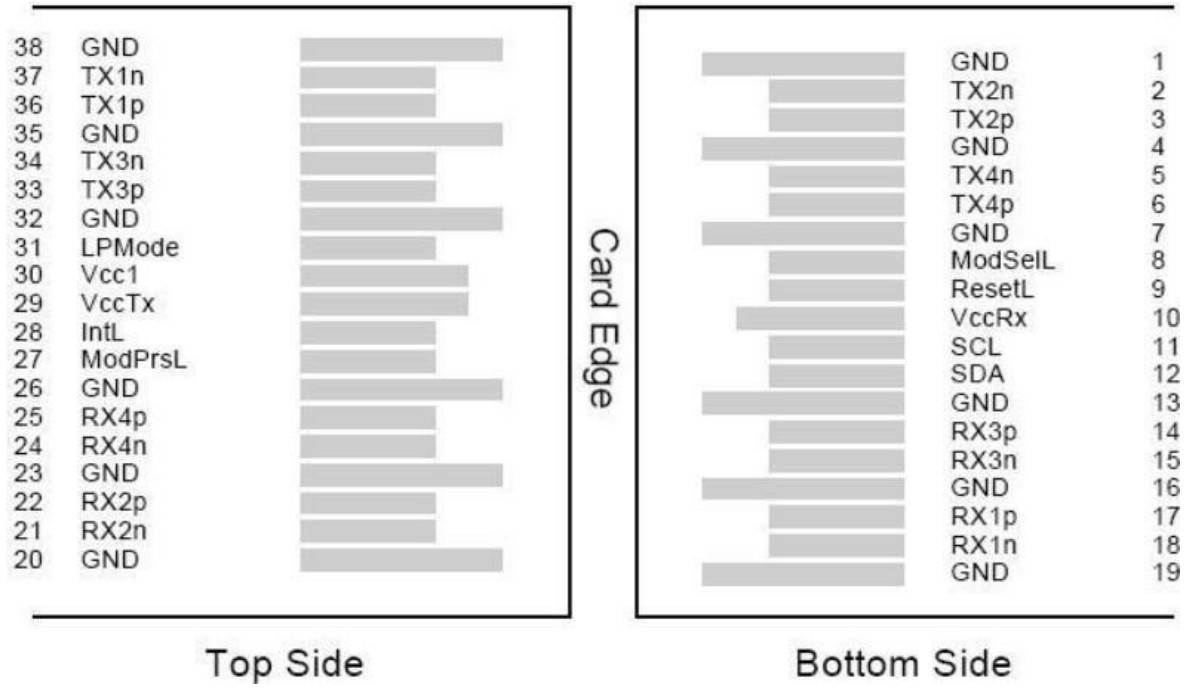

Figure 1 – Pin out of Connector Block on Host Board

Pin	Symbol	Name/Description	Note
1	GND	Transmitter Ground (Common with Receiver Ground)	1
2	Tx2n	Transmitter Inverted Data Input	
3	Tx2p	Transmitter Non-Inverted Data output	
4	GND	Transmitter Ground (Common with Receiver Ground)	1
5	Tx4n	Transmitter Inverted Data Input	
6	Tx4p	Transmitter Non-Inverted Data output	
7	GND	Transmitter Ground (Common with Receiver Ground)	1
8	ModSelL	Module Select	
9	ResetL	Module Reset	
10	VccRx	3.3V Power Supply Receiver	2
11	SCL	2-Wire serial Interface Clock	
12	SDA	2-Wire serial Interface Data	
13	GND	Transmitter Ground (Common with Receiver Ground)	
14	Rx3p	Receiver Non-Inverted Data Output	
15	Rx3n	Receiver Inverted Data Output	
16	GND	Transmitter Ground (Common with Receiver Ground)	1
17	Rx1p	Receiver Non-Inverted Data Output	
18	Rx1n	Receiver Inverted Data Output	
19	GND	Transmitter Ground (Common with Receiver Ground)	1
20	GND	Transmitter Ground (Common with Receiver Ground)	1

Pin	Symbol	Name/Description	Note
21	Rx2n	Receiver Inverted Data Output	
22	Rx2p	Receiver Non-Inverted Data Output	
23	GND	Transmitter Ground (Common with Receiver Ground)	1
24	Rx4n	Receiver Inverted Data Output	1
25	Rx4p	Receiver Non-Inverted Data Output	
26	GND	Transmitter Ground (Common with Receiver Ground)	1
27	ModPrsl	Module Present	
28	IntL	Interrupt	
29	VccTx	3.3V power supply transmitter	2
30	Vcc1	3.3V power supply	2
31	LPMode	Low Power Mode	
32	GND	Transmitter Ground (Common with Receiver Ground)	1
33	Tx3p	Transmitter Non-Inverted Data Input	
34	Tx3n	Transmitter Inverted Data Output	
35	GND	Transmitter Ground (Common with Receiver Ground)	1
36	Tx1p	Transmitter Non-Inverted Data Input	
37	Tx1n	Transmitter Inverted Data Output	
38	GND	Transmitter Ground (Common with Receiver Ground)	1

Notes:

1. GND is the symbol for signal and supply (power) common for QSFP28 modules. All are common within the QSFP28 module and all module voltages are referenced to this potential unless otherwise noted. Connect these directly to the host board signal common ground plane.
2. VccRx, Vcc1 and VccTx are the receiving and transmission power suppliers and shall be applied concurrently. Recommended host board power supply filtering is shown below. Vcc Rx, Vcc1 and Vcc Tx may be internally connected within the QSFP28 transceiver module in any combination. The connector pins are each rated for a maximum current of 500mA.

Specifications

Absolute Maximum Ratings

Parameter	Symbol	Min.	Typ.	Max.	Unit	Notes
Storage Temperature	Ts	-40	-	85	°C	
Relative Humidity	RH	5	-	95	%	
Power Supply Voltage	V_{CC}	-0.3	-	4	V	
Signal Input Voltage		Vcc-0.3	-	Vcc+0.3	V	

Recommended Operating Conditions

Parameter	Symbol	Min.	Typ.	Max.	Unit	Notes
Operating Case Temperature	Tcase	0	-	70	°C	Without air flow
Power Supply Voltage	V_{CC}	3.15	3.3	3.45	V	

Parameter	Symbol	Min.	Typ.	Max.	Unit	Notes
Power Supply Current	I_{CC}	-		600	mA	
Data Rate	BR		25.78125		Gbps	Each channel
Transmission Distance	TD	-		100	m	OM4
	TD	-		70	m	OM3

Note: 100G Ethernet &100GBASE-SR4 and ITU-T OTU4 has different register setting, not auto-negotiation.

Optical Characteristics

Parameter	Symbol	Min	Typ	Max	Unit	Notes
Transmitter						
Center Wavelength	λ0	840		860	nm	
Average Launch Power each Lane		-8.4		2.4	dBm	
Spectral Width (RMS)	σ			0.6	nm	
Optical Extinction Ratio	ER	3			dB	
Optical Return Loss Tolerance	ORL			12	dB	
Output Eye Mask		Compliant with IEEE 802.3bm-2015				1
Receiver						
Receiver Wavelength	λin	840		860	nm	
Rx Sensitivity per Lane	RSENS			-10.3	dBm	
LOS De-Assert	LOSD	-30			dBm	
LOS Assert	LOSA			-12	dBm	
Input Saturation Power (Overload)	Psat	2.4			dBm	
Receiver Reflectance	Rr			-12	dB	

Note: Hit ratio $1.5*10^{-5}$ hits per sample.

Electrical Characteristics

Parameter	Symbol	Min	Typ	Max	Unit	Notes
Supply Voltage	Vcc	3.14	3.3	3.46	V	
Supply Current	Icc			600	mA	
Transmitter						
Input Differential Impedance	Rin		100		Ω	1
Differential Data Input Swing	Vin, pp	180		1000	mV	
Single Ended Input Voltage Tolerance	Vint	-0.3		4.0	V	
Receiver						
Differential Data Output Swing	Vout, pp	300		850	mV	2
Single-Ended Output Voltage		-0.3		4.0	V	

Notes:

1. Connected directly to TX data input pins. AC coupled thereafter.
2. Into 100 Ω differential termination.

Ordering Information

Product Name	Product Description
QSFP28-100G-SR01	QSFP28 Plug-in, 100GBASE-SR4 850nm, 100m on OM4, MPO-12 Male, DOM
JQ28-100G-SR01	QSFP28 Plug-in, 100GBASE-SR4 850nm, 100m on OM4, MPO-12 Male, DOM, Compatible with Juniper

Contact Information

Ascent Communication Technology Ltd

AUSTRALIA
140 William Street, Melbourne
Victoria 3000, AUSTRALIA
Phone: +61-3-8691 2902

Hong Kong SAR
Room 1210, 12th Floor, Wing Tuck Commercial Centre
181 Wing Lok Street, Sheung Wan , Hong Kong SAR
Phone: +852-2851 4722

CHINA
Unit 1933, 600 Luban Road
200023, Shanghai, CHINA
Phone: +86-21-60232616

USA
2710 Thomes Ave
Cheyenne, WY 82001, USA
Phone: +1 203 350 9822

EUROPE
Pfarrer-Bensheimer-Strasse 7a
55129 Mainz, GERMANY
Phone: +49 (0) 6136 926 3246

VIETNAM
11th Floor, Hoa Binh Office Tower
106 Hoang Quoc Viet Street, Nghia Do Ward
Cau Giay District, Hanoi 10649, VIETNAM
Phone: +84-24-37955917

WEB: www.ascentcomtec.com

EMAIL: sales@ascentcomtec.com

Specifications and product availability are subject to change without notice.
Copyright © 2026 Ascent Communication Technology Limited. All rights reserved.
Ver. ACT_QSFP28-100G-SR01_Datasheet_V1e_May_2019