ASCENT Communication Technology

AON1210 1GHz 2-Port Optical Node

Quick Reference Guide

Revision H

ACT AON1210 2 port Optical Node

Quick Reference Guide

ACT Document Number: ACT AON1210 Optical Receiver Quick Reference Guide

User Guide Revision H

Copyright © 2026 Ascent Communication Technology Limited.

All rights reserved. Reproduction in any manner whatsoever without the express written permission of Ascent Communication Technology is strictly forbidden.

This document is produced to assist professional and properly trained personnel with installation and maintenance issues for the product. The capabilities, system requirements and/or compatibility with third-party products described herein are subject to change without notice.

For more information, contact ACT: support@ascentcomtec.com

Revision History

Revision	Date	Reason for Change
A	11/10/2016	Initial release
B	09/03/2017	Minor updates
C	09/21/2017	Minor updates
D	01/04/2021	Updated specifications
E	01/19/2021	Updated section 7
F	07/30/2025	Updated section 3.2
G	09/30/2025	Updated specifications
H	03/10/2026	Updated section1/3.2/5 and product name

Table of Contents

1 Product Summary 4

2 Performance Characteristics 4

3 Product Specification 5

3.1 Link Testing Conditions 5

3.2 Specifications 5

4 Outline Dimensions 7

5 Block Diagram 7

6 Relation Table of Input Optical Power and CNR 8

7 Function Display and Operating Instructions 8

8 Structure Diagram 9

9 Set and Use the Network Management Transponder 10

10 Common Failure Analysis and Troubleshooting 12

11 Cleaning and Maintenance of the Optical Fiber Active Connector 13

1 Product Summary

AON1210 Series 1- or 2-port two-way Optical Node is part of ACT Deep Fiber solution, which has been designed to deliver interactive CATV, high capacity DOCSIS Data and other advanced services. The cost-effective node platform helps service providers expand bandwidth of their existing HFC network while minimizing capital investment.

AON1210 is a 1GHz features a modular design for flexible applications. It has microprocessor control, a digital display, and an easy-to-use engineering debug interface. It has highly-optimized circuit design using SMT process production for smooth photoelectric signal transmissions. It has good RF attenuation with high accuracy with its use of a specialized RF attenuation chip. It uses GaAs technology to achieve high gains and low distortion, and has excellent AGC performance.

AON1210 node suits the last mile fiber deep access networks and also provides the optional HMS interface to support the remote monitoring capability in advanced network management system.

2 Performance Characteristics

- High response PIN photoelectric conversion tube
- Optimized circuit design, SMT process production, optimized signal path, make the photoelectric signal transmission smoother
- Specialized RF attenuation chip, with good RF attenuation and equilibrium linear, high accuracy
- GaAs amplifier device, power doubler output, with high gain and low distortion
- Single Chip Microcomputer (SCM) control equipment working, LCD display the parameters, convenience and intuitive operation, and stable performance
- Excellent AGC performance, when the input optical power range is - 9 to + 2dBm, the output level keep unchanged, CTB and CSO basically unchanged
- Reserved data communication interface, can connect with the Ethernet transponder, access to network management system
- Return emission can select burst mode to sharply decrease the noise convergence and reduce the forepart receiver number

3 Product Specification

3.1 Link Testing Conditions

The technique parameters of this manual according to the measuring method of <Specifications and methods of measurement on optical node used in CATV systems>, and tested in the following conditions.

Testing conditions:

1. Forward optical receive part: with 10km standard optical fiber, passive optical attenuator and standard optical transmitter composed the testing link. Set **59 PAL-D** analog TV channel signal at range of **45/87 MHz to 550 MHz** under the specified link loss. Transmit digital modulated signal at the range of **550 MHz to 862/1003 MHz**, the digital modulated signal level (in **8 MHz** bandwidth) is **10 dB** lower than analog signal carrier level. When the input optical power of optical receiver is **-1 dBm**, the RF output level is **108 dBµV**, with **8 dB** output tilt, measure the **C/CTB**, **C/CSO** and **C/N**.

2. Backward optical transmit part: Link flatness and **NPR** dynamic range are the link indexes which is composed of backward optical transmitter and backward optical receiver.

   Note: When the rated output level is the system full configuration and the receiving optical power is **-1 dBm**, equipment meets the maximum output level of link index. When the system configuration reduce (that is, actual transmission channels reduce), the output level of equipment will be increased.

   RF signal is recommended to set with **6 dB to 9 dB** tilt output in the practical engineering application to improve the nonlinear index (behind the node) of the cable system.

3.2 Specifications

Item	Unit	Technical Parameters	
Forward Optical Parameters			
Receiving Optical Power	dBm	-8 to +2	
Optical Return Loss	dB	>45	
Optical Receiving Wavelength	nm	1100 to 1600	
Optical Connector Type		FC/APC, SC/APC or specified by the user	
Fiber Type		Single Mode	
Link Performance			
C/N	dB	≥ 51 (-1dBm input)	
C/CTB	dB	≥ 65	Output Level 106dBµV
C/CSO	dB	≥ 60	EQ 8dB 79ch PAL-D
Forward RF Parameters			
Frequency Range	MHz	54/85/105/258 -1003	
Flatness in Band	dB	±0.75	
Rated Output Level	dBµV	≥ 106	
Max Output Level	dBµV	≥ 108	
Output Return Loss	dB	(54/85/105/258 to 550MHz)≥16/(550 to 1003MHz)≥14	
Output Impedance	Ω	75	
Electronic Control EQ Range	dB	0 to 15	
Electronic Control ATT Range	dBµV	0 to 20	

Return Optical Parameters

Optical Transmit Wavelength	nm	1310±10, 1550±10 or specified by the user	
Output Optical Power	mW	0.5, 1, 2	
Optical Connector Type		FC/APC, SC/APC or specified by the user	

Return RF Parameters

Frequency Range	MHz	5 to 42/65/85/204	
Flatness in Band	dB	±0.75	
Input Level	dBµV	72 to 85	
Output Impedance	Ω	75	
NPR Dynamic Range	dB	≥15 (NPR≥30 dB) Use DFB laser	≥10(NPR≥30 dB) Use FP laser

General Performance

Supply Voltage	V	A: AC (150 to 265)V; B: AC (35 to 90)V
Operating Temperature	°C	-40 to 60
Storage Temperature	°C	-40 to 65
Relative Humidity	%	Max 95% no condensation
Consumption	VA	≤ 20
Dimension (L×W×H)	mm	280 x 260 x 70
Net Weight	kg	2.8

Burst Mode (Optional)

Optical Output Power (When there is no burst signal input)	dBm	-30
Laser Turn On Threshold	dBµV	≥70
Laser Turn Off Threshold	dBµV	≤62
Laser Turn On Time (t1)	us	0.5≤ t1 ≤1
Laser Turn Off Time (t2)	us	0.5≤ t2 ≤1.5

Note: The forward RF parameters are tested under the condition of using GaAs 25dB power doubler module in the last stage. Use other module, the parameters will be slightly different.

4 Outline Dimensions

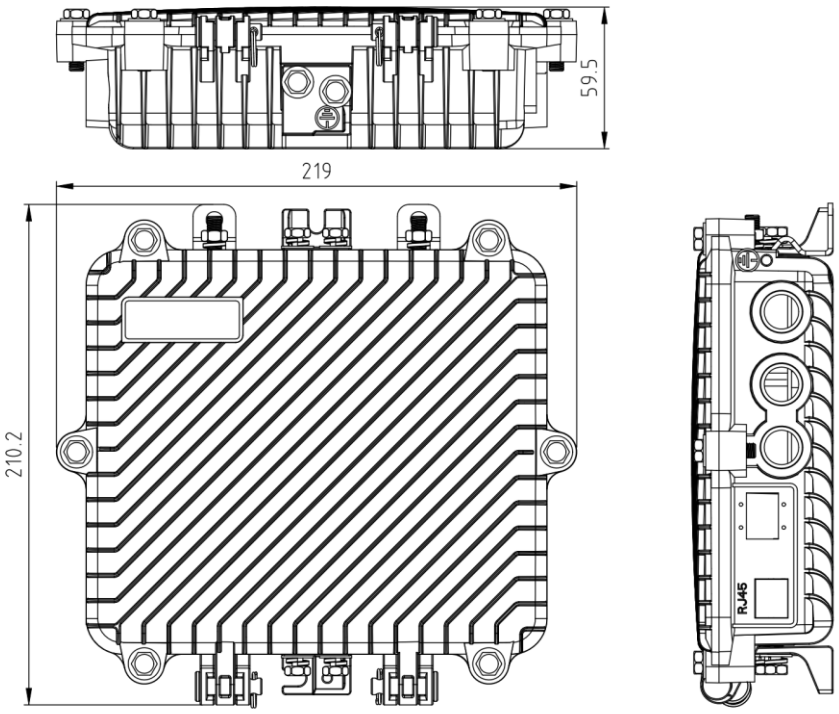

5 Block Diagram

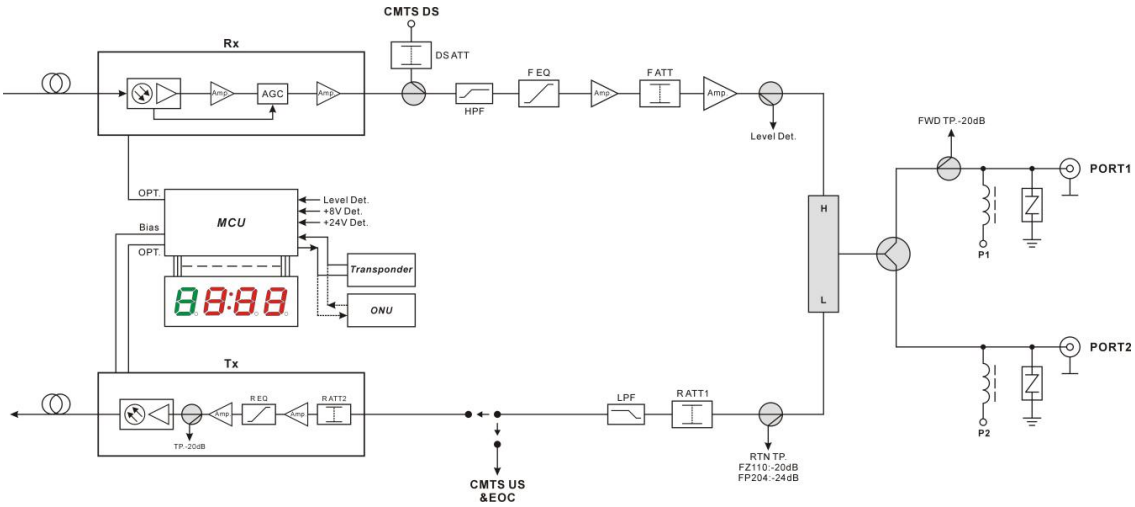

Dual Fiber Option

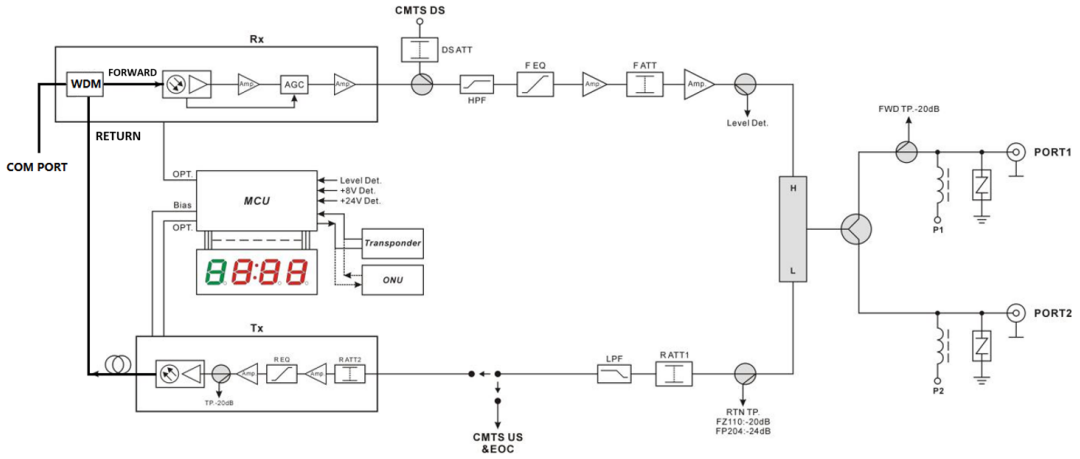

Single Fiber Option

6 Relation Table of Input Optical Power and CNR

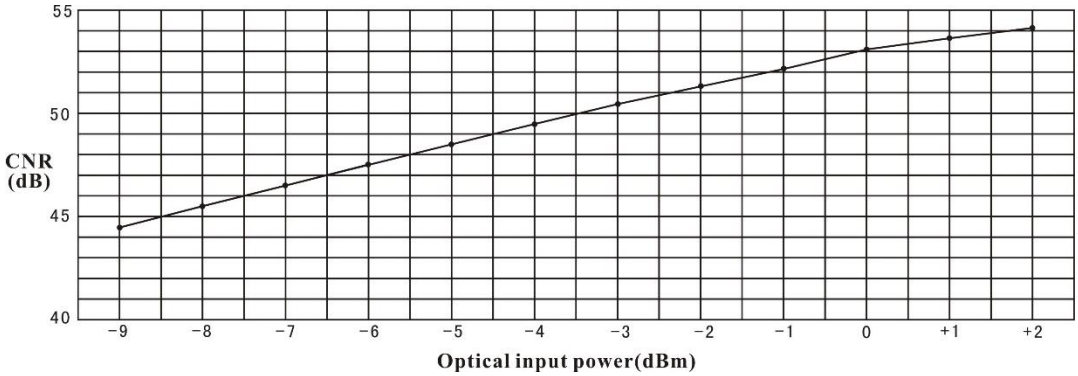

7 Function Display and Operating Instructions

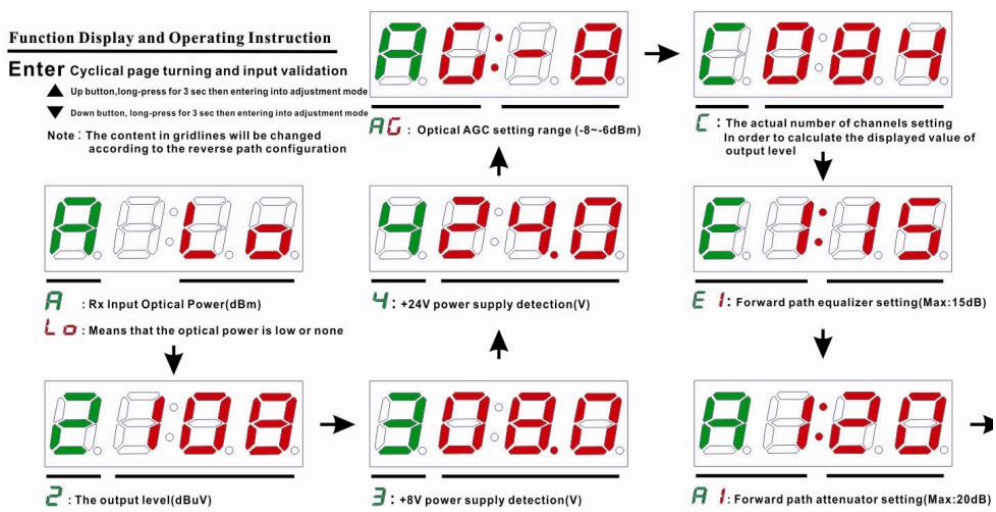

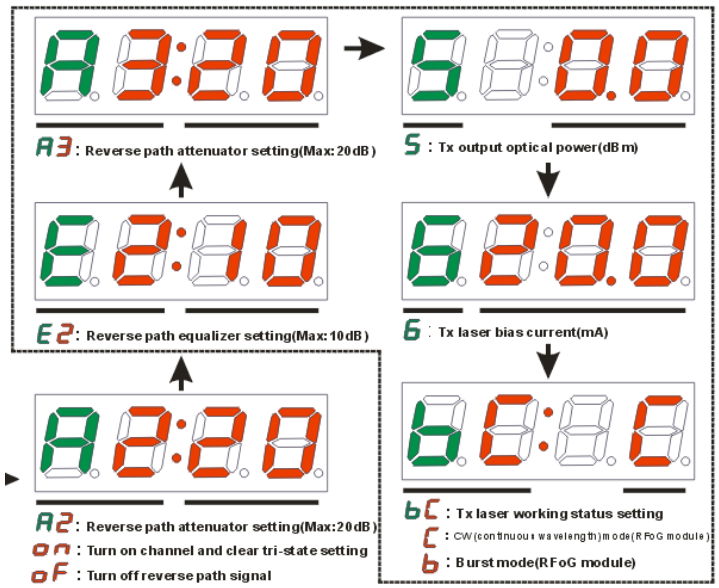

8 Structure Diagram

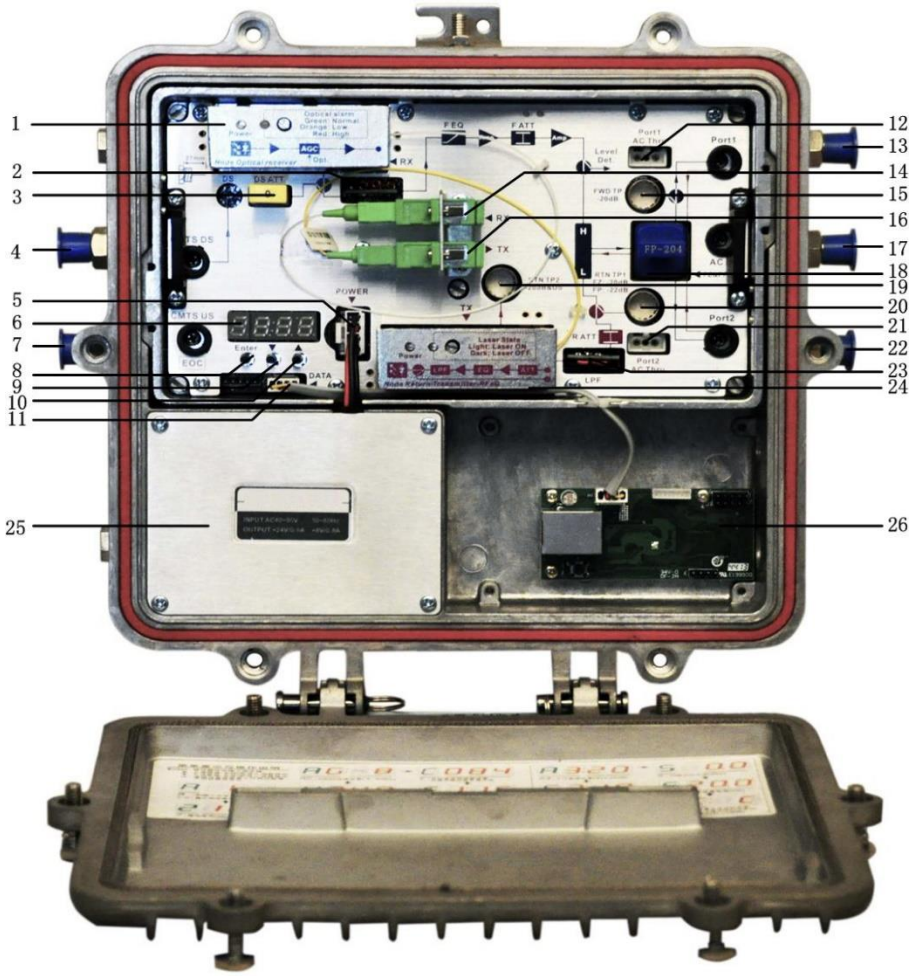

1. Optical receiving module
2. HPF (high pass filter)
3. DS attenuator
4. CMTS DS port(without installing by default)
5. Mainboard power supply interfafce
6. Seven-segment digital tube status display
7. CMTS US port/EOC signal interface (without installing by default)
8. Control mode selectable button (Enter)
9. Parameters adjustment button (Down)
10. Paramenters adjustment button (Up)
11. Mainboard network mangement interface
12. Power-pass inserter
13. Output port1
14. Optical input port
15. RF output test port (-20dB)
16. Optical output port
17. AC60V input port
18. Splitter or tap output
19. Laser drive level test port (-20dB)
20. Reverse path RF input test port (-20dB)
21. Power-pass inserter
22. Output port2
23. LPF (low pass filter)
24. Optical transmitter module
25. Switching power supply
26. WDM or transponder

9 Set and Use the Network Management Transponder

Note: This equipment can connect the Ethernet transponder, access to the network management system. The network management transponder is optional, users decide whether use according to actual requirement.

If Network Management Transponder is needed, please set it as follows:

Transponder IP setup

1. Default IP is 192.168.1.168, default gateway is 192.168.1.1, default subnet mask is 255.255.255.0
2. Connect the computer and transponder (directly), and change IP to 192.168.1.XXX (XXX is any number from 0 to 255 except 168); Start host computer Network Management software, then search the device and log in.
3. Right-click this icon and choose alter IP.

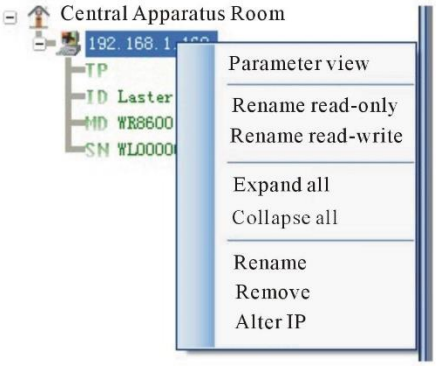

4. Enter new IP address, gateway and Subnet Mask.

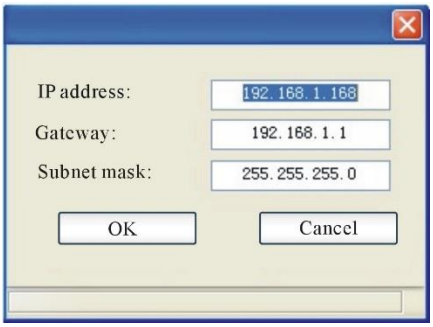

5. Click OK, then exit, it is done. There is new IP address and gateway on operational logbook.

No.	Type	Content	Date
1752	Change IP Address	Change IP address192.168.1.168 new IP:192.168.1.167 newgateway:192.168.1.1	2009-9-9 02:39:03

6. Reboot the transponder, the new IP become effective (Click reboot button in the network management software or power on again).

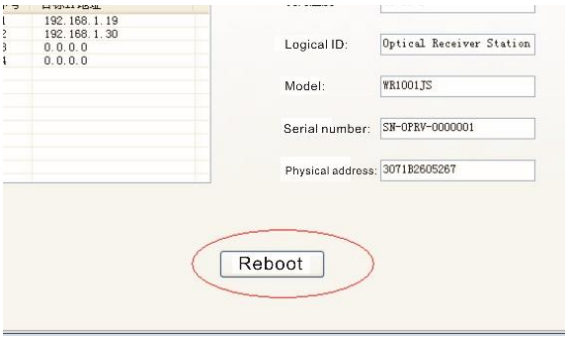

10 Common Failure Analysis and Troubleshooting

Failure Phenomenon	Failure Cause	Solution
After connecting the network, the image of the optical contact point has obvious netlike curve or large particles highlights but the image background is clean.	1. The optical input power of the optical receiver is too high, make the output level of the optical receiver module too high and RF signal index deteriorate. 2. The RF signal (input the optical transmitter) index is poor.	1. Check the optical input power and make appropriate adjustments to make it in the specified range; or adjust the attenuation of optical receiver to reduce the output level and improve index. 2. Check the front end machine room optical transmitter RF signal index and make appropriate adjustments.
After connecting the network, the image of the optical contact point has obvious noises.	1. The optical input power of the optical receiver is not high enough, results in the decrease of C/N. 2. The optical fiber connector or adapter of the optical receiver has been polluted. 3. The RF input signal level of the optical transmitter is too low, make the modulation degree of the laser is not enough. 4. The C/N index of system link signal is too low.	1. Check the received optical power of the optical contact point and make appropriate adjustments to make it in the specified range. 2. Improve the optical received power of the optical contact point by cleaning the optical fiber connector or adapter etc methods. Specific operation methods see “Clean and maintenance method of the optical fiber connector”. 3. Check the RF input signal level of the optical transmitter and adjust to the required input range. (When the input channels number less than 15, should be higher than the nominal value.) 4. Use a spectrum analyzer to check the system link C/N and make appropriate adjustments. Make sure the system link signal C/N > 51dB.
After connecting the network, the images of several optical contact points randomly appear obvious noises or bright traces.	The optical contact point has open circuit signal interference or strong interference signal intrusion.	1. Check if there is a strong interference signal source; change the optical contact point location if possible to avoid the influence of the strong interference signal source. 2. Check the cable lines of the optical contact point, if there is shielding net or situation that the RF connector shielding effect is not good. 3. Tightly closed the equipment enclosure to ensure the shielding effect; if possible add shielding cover to the optical contact point and reliable grounding.
After connecting the network, the images of several optical contact points appear one or two horizontal bright traces.	Power supply AC ripple interference because of the bad earth of equipment or power supply.	Check grounding situation of the equipment, make sure that every equipment in the line has been reliably grounding and the grounding resistance must be < 4Ω.

Failure Phenomenon	Failure Cause	Solution
After connecting the network, the received optical power of the optical contact point is unstable and changes continuously. The output RF signal is also unstable. But the detected optical output power of the optical transmitter is normal.	The optical fiber connector types do not match, maybe the APC type connect to PC type. The optical fiber connector or adapter may be polluted seriously or the adapter has been damaged.	1. Check the type of optical fiber connector and adopt the APC type optical fiber connector to ensure the normal transmission of optical signal. 2. Clean the polluted optical fiber connector or adapter. Specific operation methods see “Clean and maintenance method of the optical fiber connector”. 3. Replace the damaged adapter.

11 Cleaning and Maintenance of the Optical Fiber Active Connector

In many times, we consider the decline of the optical power as the equipment faults, but actually it may be caused by that the optical fiber connector was polluted by dust or dirt. Inspect the fiber connector, component, or bulkhead with a fiberscope. If the connector is dirty, clean it with a cleaning technique following these steps:

1. Turn off the device power supply and carefully pull off the optical fiber connector from the adapter.
2. Wash carefully with good quality lens wiping paper and medical absorbent alcohol cotton. If use the medical absorbent alcohol cotton, still need to wait 1 to 2 minutes after wash, let the connector surface dry in the air.
3. Cleaned optical connector should be connected to optical power meter to measure output optical power to affirm whether it has been cleaned up.
4. When connect the cleaned optical connector back to adapter, should notice to make force appropriate to avoid china tube in the adapter crack.
5. The optical fiber connector should be cleaned in pairs. If optical power is on the low side after clean, the adapter may be polluted, clean it. (Note: Adapter should be carefully operated, so as to avoid hurting inside fiber.
6. Use compressed air or degrease alcohol cotton to wash the adapter carefully. When use compressed air, the muzzle aims at china tube of the adapter, clean the china tube with compressed air. When use degrease alcohol cotton, insert directions need be consistent, otherwise can’t reach a good clean effect.

Ascent Communication Technology Ltd

AUSTRALIA
140 William Street, Melbourne
Victoria 3000, AUSTRALIA
Phone: +61-3-8691 2902

Hong Kong SAR
Room 1210, 12th Floor, Wing Tuck Commercial Centre 181 Wing Lok Street, Sheung Wan , Hong Kong SAR
Phone: +852-2851 4722

CHINA
Unit 1933, 600 Luban Road
200023, Shanghai, CHINA
Phone: +86-21-60232616

USA
2710 Thomes Ave
Cheyenne, WY 82001, USA
Phone: +1 203 350 9822

EUROPE
Pfarrer-Bensheimer-Strasse 7a
55129 Mainz, GERMANY
Phone: +49 (0) 6136 926 3246

VIETNAM
11th Floor, Hoa Binh Office Tower
106 Hoang Quoc Viet Street, Nghia Do Ward
Cau Giay District, Hanoi 10649, VIETNAM
Phone: +84-24-37955917

WEB: www.ascentcomtec.com

EMAIL: sales@ascentcomtec.com

Specifications and product availability are subject to change without notice.
Copyright © 2026 Ascent Communication Technology Limited. All rights reserved.
Ver. ACT_AON1210_Optical_Node_QRG_V1h_Mar_2024