400 Gbps OSFP Multi-Mode 50m Transceiver

400G OSFP Series

- **OSFP form factor hot pluggable**
- **CMIS compliance**
- **4 parallel lanes of 100G-PAM4 electrical and optical parallel lanes**
- **Optical port of MPO-12/APC**
- **Up to 50m reach on multi-mode fiber OM4 and 30m on OM3 with FEC**
- **9 Watts max**
- **Case temperature range of 0°C to 70°C**

Ascent's 400Gb/s Octal Small Form-factor Pluggable (OSFP) optical module without a top open fin is designed for Ethernet, Telecom and InfiniBand use cases and can be used to reach 50m with OM4 fiber optical communication applications with Forward Error Correction (FEC).

This module converts 4 channels of 100G-PAM4 electrical input data to 4 channels of parallel optical signals, each capable of 100Gb/s operation for an aggregate data rate of 400Gb/s. Reversely, on the receiver side, the module converts 4 channels of parallel optical signals of 100Gb/s each channel for an aggregate data rate of 400Gb/s into 4 channels of 100Gb/s (PAM4) electrical output data.

MPO-12 connector can be plugged into the OSFP112 SR4 module jack with 4 channels. Proper alignment is ensured by the guide pins inside the receptacle. The cable usually cannot be twisted for proper channel-to-channel alignment. The I2C interface is supported to read and control the status of this product. The electrical connection is achieved through an OSFP MSA-compliant edge-type connector.

Key Features

- IEEE 802.3cd, IEEE 802.3bs Annex120E
- Adaptive Tx input equalization
- Programmable Rx output amplitude, Rx output pre-cursor, Rx output post-cursor
- Supply voltage monitoring (DDM_Voltage)
- Transceiver case temperature monitoring (DDM_Temperature)
- Tx transmit optical power monitoring for each lane (DDM_TxPower)
- Tx bias current monitoring for each lane (DDM_TxBias)
- Rx receive optical power monitoring for each lane (DDM_RxPower)
- Warning and alarm indication for each DDM function
- Tx & Rx LOL and LOS indication, Tx fault indication
- Host and line side loopback capabilities, PRBS generator and checker capabilities
- CDB firmware upgrade capability
- Versatile diagnostics monitoring (VDM) capability (optional, additional power consumption increase)
- Other functions defined in CMIS

Mechanical Dimensions

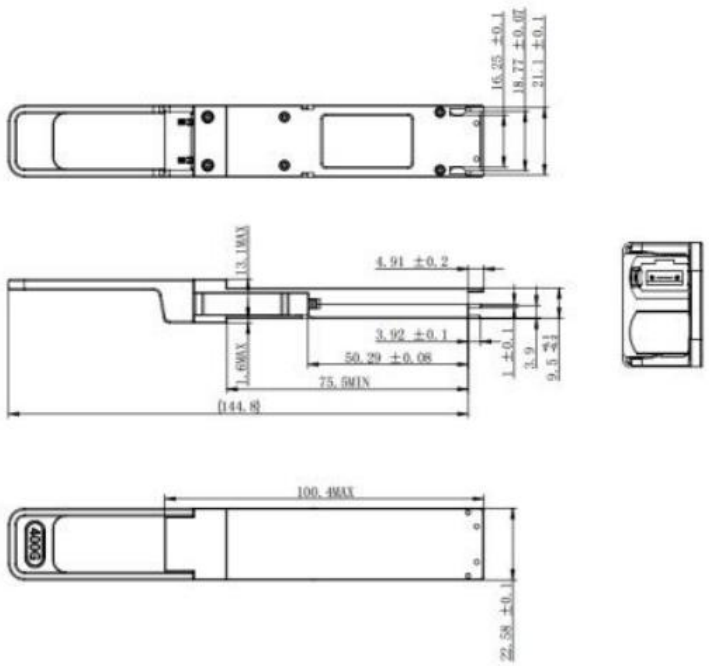

Transceiver Block Diagram

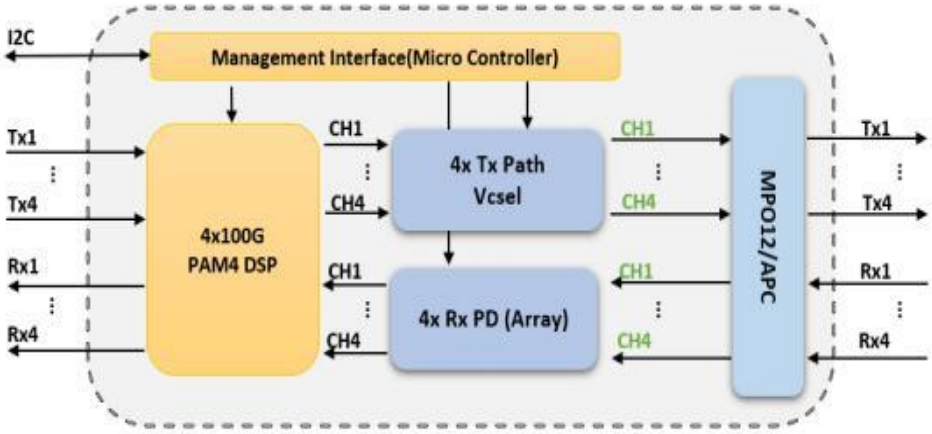

Pin Map and Description

The electrical interface of OSFP module consist of a 60 contacts edge connector as illustrated by the diagram in figure below, which defined in Clause 8.1 of OSFP MSA Specification.

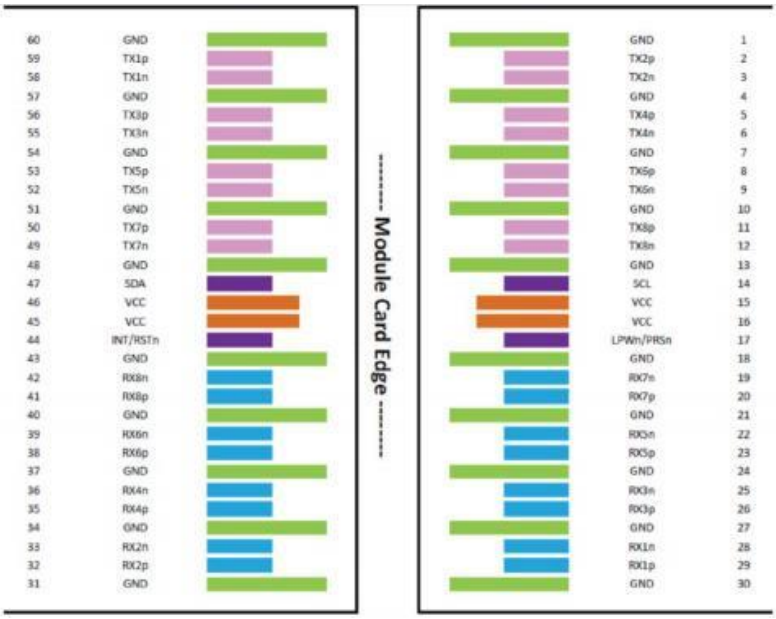

Pin#	Symbol	Description	Logic	Direction	Plug Sequence
1	GND		Ground		1
2	TX2p	Transmitter Data Non-Inverted	CML-I	Input from Host	3
3	TX2n	Transmitter Data Inverted	CML-I	Input from Host	3
4	GND		Ground		1
5	TX4p	Transmitter Data Non-Inverted	CML-I	Input from Host	3
6	TX4n	Transmitter Data Inverted	CML-I	Input from Host	3
7	GND		Ground		1
8	TX6p	Transmitter Data Non-Inverted	CML-I	Input from Host	3

Pin#	Symbol	Description	Logic	Direction	Plug Sequence
9	TX6n	Transmitter Data Inverted	CML-I	Input from Host	3
10	GND		Ground		1
11	TX8p	Transmitter Data Non-Inverted	CML-I	Input from Host	3
12	TX8n	Transmitter Data Inverted	CML-I	Input from Host	3
13	GND		Ground		1
14	SCL	2-wire Serial interface clock	LVCMOS-I/O	Bi-directional	3
15	VCC	+3.3V Power		Power from Host	2
16	VCC	+3.3V Power		Power from Host	2
17	LPWn/PRSn	Low-Power Mode / Module Present	Multi-Level	Bi-directional	3
18	GND		Ground		1
19	RX7n	Receiver Data Inverted	CML-O	Output to Host	3
20	RX7p	Receiver Data Non-Inverted	CML-O	Output to Host	3
21	GND		Ground		1
22	RX5n	Receiver Data Inverted	CML-O	Output to Host	3
23	RX5p	Receiver Data Non-Inverted	CML-O	Output to Host	3
24	GND		Ground		1
25	RX3n	Receiver Data Inverted	CML-O	Output to Host	3
26	RX3p	Receiver Data Non-Inverted	CML-O	Output to Host	3
27	GND		Ground		1
28	RX1n	Receiver Data Inverted	CML-O	Output to Host	3
29	RX1p	Receiver Data Non-Inverted	CML-O	Output to Host	3
30	GND		Ground		1
31	GND		Ground		1
32	RX2p	Receiver Data Non-Inverted	CML-O	Output to Host	3
33	RX2n	Receiver Data Inverted	CML-O	Output to Host	3
34	GND		Ground		1
35	RX4p	Receiver Data Non-Inverted	CML-O	Output to Host	3
36	RX4n	Receiver Data Inverted	CML-O	Output to Host	3
37	GND		Ground		1
38	RX6p	Receiver Data Non-Inverted	CML-O	Output to Host	3
39	RX6n	Receiver Data Inverted	CML-O	Output to Host	3
40	GND		Ground		1
41	RX8p	Receiver Data Non-Inverted	CML-O	Output to Host	3
42	RX8n	Receiver Data Inverted	CML-O	Output to Host	3
43	GND		Ground		1
44	INT/RSTn	Module Interrupt / Module Reset	Multi-Level	Bi-directional	3
45	VCC	+3.3V Power		Power from Host	2
46	VCC	+3.3V Power		Power from Host	2

Pin#	Symbol	Description	Logic	Direction	Plug Sequence
47	SDA	2-wire Serial interface data	LVCMOS-I/O	Bi-directional	3
48	GND		Ground		1
49	TX7n	Transmitter Data Inverted	CML-I	Input from Host	3
50	TX7p	Transmitter Data Non-Inverted	CML-I	Input from Host	3
51	GND		Ground		1
52	TX5n	Transmitter Data Inverted	CML-I	Input from Host	3
53	TX5p	Transmitter Data Non-Inverted	CML-I	Input from Host	3
54	GND		Ground		1
55	TX3n	Transmitter Data Inverted	CML-I	Input from Host	3
56	TX3p	Transmitter Data Non-Inverted	CML-I	Input from Host	3
57	GND		Ground		1
58	TX1n	Transmitter Data Inverted	CML-I	Input from Host	3
59	TX1p	Transmitter Data Non-Inverted	CML-I	Input from Host	3
60	GND		Ground		1

OSFP Control pins

Name	Direction	Description
SCL	BiDir	2-wire serial clock signal. Requires pull-up resistor to 3.3V on host.
SDA	BiDir	2-wire serial data signal. Requires pull-up resistor to 3.3V on host.
LPWn/PRSn	Input/Output	Dual Function Signal. Low Power mode is an active-low input signal. Module Present is controlled by a pull-down resistor on the module which gets converted to an active-low output logic signal Voltage zones is shown as figure below.
INT/RSTn	Input/Output	Dual Function Signal. Reset is an active-low input signal. Interrupt is an active-high output signal Voltage zones is shown as figure below.

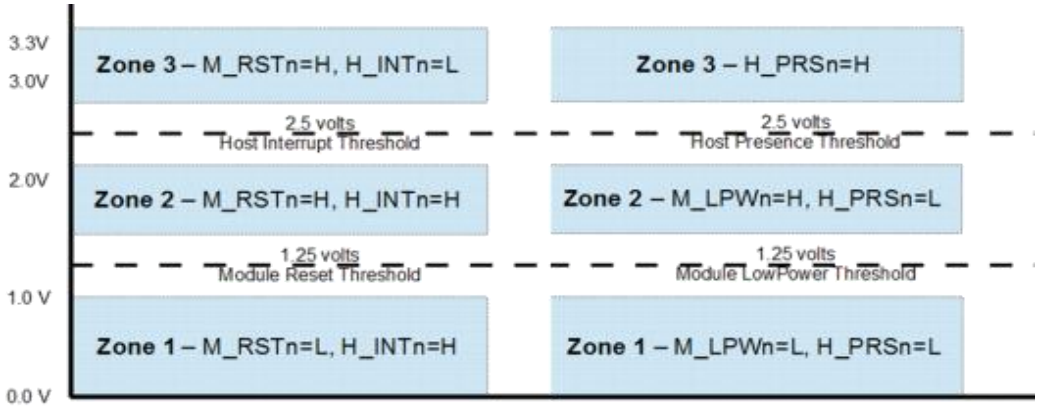

Pin Recommended Power Supply Filter

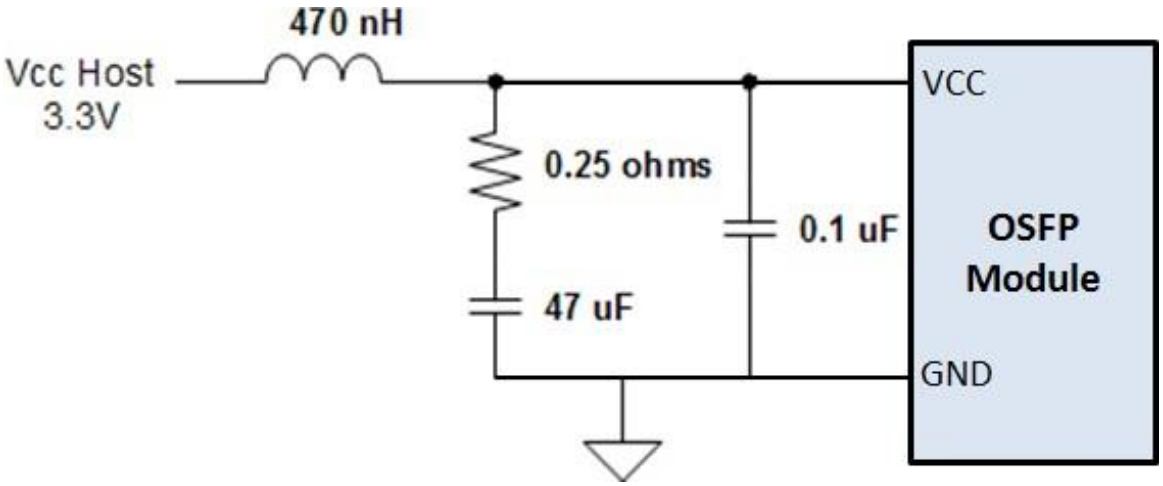

Optical Port Description

The optical interface port is MPO-12 receptacle. The transmit and receive optical lanes shall occupy the positions depicted in figure below when looking into the MDI receptacle with the connector keyway feature on top.

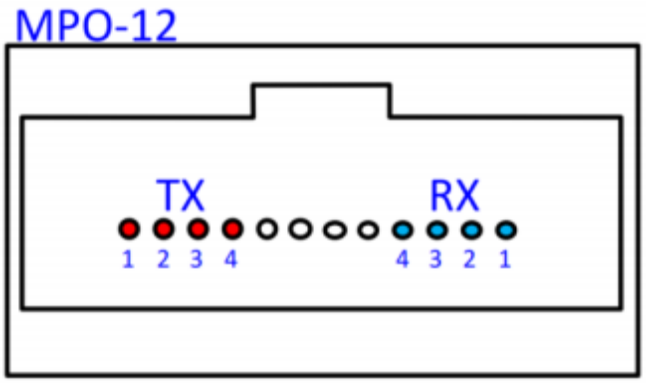

Specifications

Absolute Maximum Ratings

It has to be noted that the operation in excess of any individual absolute maximum ratings might cause permanent damage to this module.

Parameter	Symbol	Min.	Max.	Unit
Storage Temperature	T_S	-40	85	°C
Operating Case Temperature	T_{OP}	0	70	°C
Power Supply Voltage	V_{CC}	-0.5	3.6	V
Relative Humidity (Non-Condensation)	RH	0	85	%

Recommended Operating Conditions

Parameter	Symbol	Min.	Typ.	Max.	Unit	Note
Operating Case Temperature	T_{OP}	0		70	°C	
Power Supply Voltage	V_{CC}	3.135	3.3	3.465	V	
Data Rate, Each Lane			53.125		GBd	PAM4
Data Rate Accuracy		-100		100	ppm	
Pre-FEC Bit Error Ratio				$2.4x10^{-4}$		
Post-FEC Bit Error Ratio				$1x10^{-12}$		1
Link Distance (OM3)	D1	2		50	m	2
Link Distance (OM4)	D2	2		30	m	

Notes:

1. FEC provided by host system.
2. FEC required on host system to support maximum distance.

Electrical Characteristics

The following electrical characteristics are defined over the Recommended Operating Environment unless otherwise specified.

Parameter	Symbol	Min.	Typ.	Max.	Unit	Note
Power Consumption				9.0	W	
Supply Current	Icc			2.87	A	
Transmitter (Each Lane)						
Signaling Rate, Each Lane	TP1	53.125 ± 100 ppm			GBd	
Differential Pk-Pk Input Voltage Tolerance	TP1a	750			mV	
Peak-To-Peak AC Common-Mode Voltage Tolerance Low-Frequency, VCMLF Full-band, VCMFB	TP1a	32 80			mV	
Differential-Mode To Common-Mode Return Loss, RLcd	TP1	IEEE 802.3ck Equation (120G–2)			dB	
Effective Return Loss, ERL	TP1	8.5			dB	
Differential Termination Mismatch	TP1a			10	%	
Module Stressed Input Tolerance	TP1a	IEEE802.3ck 120G.3.4.3			V	

Parameter	Symbol	Min.	Typ.	Max.	Unit	Note
Single-Ended Voltage Tolerance Range	TP1	-0.4 to 3.3			mV	
DC Common-Mode Voltage Tolerance Upper Limit Lower Limit	TP1	2.85 -0.35			V v	
Receiver (Each Lane)						
Signaling Rate, Each Lane	TP4	53.125 ± 100 ppm			GBd	
Peak-To-Peak AC Common-Mode Voltage Low-Frequency, VCMLF Full-Band, VCMFB	TP4			32 80	mV	
Differential Peak-To-Peak Output Voltage Short Mode Long Mode	TP4			600 845	mV mV	
Eye Height	TP4	15			mV	
Vertical Eye Closure, VEC	TP4			12	dB	
Common-Mode To Differential-Mode Return Loss, RLdc	TP4	IEEE802.3 ck Equation (120G– 1)			dB	
Effective Return Loss, ERL	TP4	8.5			dB	
Differential Termination Mismatch	TP4			10	%	
Transition Time	TP4	8.5			ps	
DC Common-Mode Voltage Tolerance Upper Limit Lower Limit	TP4	2.85 -0.35			mV	

Optical Characteristics

Parameter	Symbol	Min.	Typ.	Max.	Unit	Note
Transmitter						
Data Rate, Each Lane		53.125 ± 100 ppm			GBd	
Modulation Format		PAM4				
Wavelength	λ	842		948	nm	
RMS Spectral Width				0.65	nm	1
Average Launch Power, Each Lane	PAVG	-4.6		4	dBm	
Outer Optical Modulation Amplitude (OMA_{outer}), Each Lane	POMA	-2.6(For max (TECQ, TDECQ) ≤ 1.8 dB)-4.4 +max (TECQ, TDECQ) (For 1.8 < max (TECQ, TDECQ) ≤ 4.4dB)		3.5	dBm	
Transmitter and Dispersion Eye Closure for PAM4 (TDECQ), Each Lane	TDECQ			4.4	dB	
Transmitter Eye Closure for PAM4, Each Lane	TECQ			4.4	dB	
Overshoot/Undershoot				29	%	

Parameter	Symbol	Min.	Typ.	Max.	Unit	Note
Transmitter Power Excursion, Each Lane				2.3	dBm	
Extinction Ratio	ER	2.5			dB	
Transition Time	TT			17	ps	
Average Launch Power Of OFF Transmitter, Each Lane	PoFF			-30	dBm	
RIN14 OMA	RIN			-132	dB/Hz	
Optical Return Loss Tolerance	TOL			14	dB	
Encircled Flux		≥ 86% at 19 µm ≤ 30% at 4.5 µm				2
Receiver						
Data Rate, Each Lane		53.125 ± 100 ppm			GBd	
Modulation Format		PAM4				
Center Wavelength	λ	842		948	Nm	
Damage Threshold, Each Lane	THD	5			dBm	3
Average Receive Power, Each Lane		-6.3		4	dBm	4
Receive Power (OMA_{outer}), Each Lane				3.5	dBm	
Receiver Reflectance	RR			-15	dB	
Receiver Sensitivity (OMA_{outer}), Each Lane	SEN			-4.4 (For TECQ ≤ 1.8 dB) – 6.2+TECQ (For 1.8< TECQ ≤ 4.4 dB)	dBm	5
Stressed Receiver Sensitivity (OMA_{outer}), Each Lane	SRS			-1.8	dBm	6
LOS Assert	LOSA	-15			dBm	
LOS De-assert	LOSD			-9.2	dBm	
LOS Hysteresis	LOSH	0.5			dB	
Conditions of Stress Receiver Sensitivity Test (Note 7)						
Stressed Eye Closure for PAM4 (SECQ), Lane under Test			4.4		dB	
OMA_{outer} of each aggressor lane			3.5		dBm	

Notes:

1. RMS spectral width is the standard deviation of the spectrum.

2. If measured into type A1a.2 or type A1a.3, or A1a.4, 50 µm fiber, by IEC 61280- 1-4.

3. The receiver shall be able to tolerate, without damage, continuous exposure to a modulated optical input signal having this power level on one lane. The receiver does not have to operate correctly at this input power.

4. Average receive power, each lane (min) is informative and not the principal indicator of signal strength. A received power below this value cannot be compliant; however, a value above this does not ensure compliance.

5. Receiver sensitivity (OMA_{outer}) is informative and is defined for a transmitter with a value of TECQ up to 4 dB. Receiver sensitivity should meet Equation (1), which is illustrated in figure below.

$$RS = \max(-4.4, TECQ - 6.2)\ \text{dBm} \quad (1)$$

Where:

RS is the receiver sensitivity, and

TECQ is the TECQ of the transmitter used to measure the receiver sensitivity.

6. Measured with conformance test signal at TP3 for the BER equal to 2.4x10-4.

7. These test conditions are for measuring stressed receiver sensitivity. They are not characteristics of the receiver.

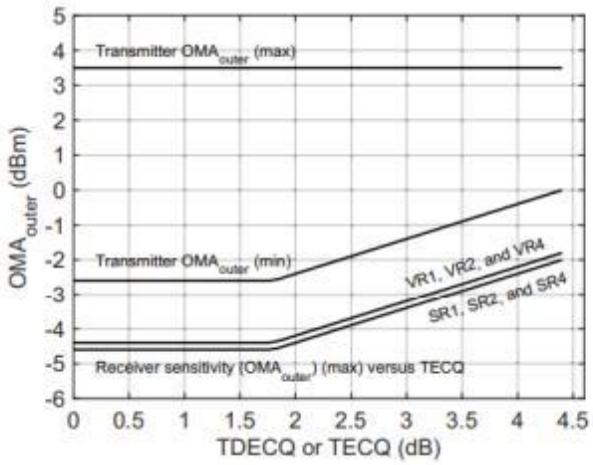

Digital Diagnostic Functions

The following digital diagnostic characteristics are defined over the normal operating conditions unless otherwise specified.

Parameter	Symbol	Min	Max	Unit	Notes
Temperature Monitor Absolute Error	DMI_Temp	-3	3	°C	Over operating temperature range
Supply Voltage Monitor Absolute Error	DMI _VCC	-0.1	0.1	V	Over full operating range
Channel RX Power Monitor Absolute Error	DMI_RX_Ch	-2	2	dB	1
Channel Bias Current Monitor	DMI_Ibias_Ch	-10%	10%	mA	
Channel TX Power Monitor Absolute Error	DMI_TX_Ch	-2	2	dB	1

Notes:

Due to measurement accuracy of different single mode fibers, there could be an additional +/-1 dB fluctuation, or a +/-3 dB total accuracy.

ESD

This transceiver is specified as ESD threshold 1kV for high speed data pins and 2kV for all other electrical input pins, tested per MIL-STD-883, Method 3015.4 /JESD22-A114-A (HBM). However, normal ESD precautions are still required during the handling of this module. This transceiver is shipped in ESD protective packaging. It should be removed from the packaging and handled only in an ESD protected environment.

Laser safety

This is a Class I Laser Product, or Class 1 Laser Product according to IEC/EN 60825-1:2014.

This product complies with 21 CFR 1040.10 and 1040.11 except for conformance with IEC 60825-1 Ed. 3. , as described in Laser Notice No. 56, dated May 8, 2019.

Caution: Use of controls or adjustments or performance of procedures other than those specified herein may result in hazardous radiation exposure.

Ordering Information

Product Name	Product Description
OSFP-400G-SR4A05	OSFP-400G-SR4A05 400G OSFP SR4 FLT Optical Transceiver Module, MMF 850nm, 50m on OM4, MTP/MPO-12 with FEC, DDM

Contact Information

Ascent Communication Technology Ltd

AUSTRALIA
140 William Street, Melbourne
Victoria 3000, AUSTRALIA

Phone: +61-3-8691 2902

CHINA
Unit 1933, 600 Luban Road
200023, Shanghai, CHINA
Phone: +86-21-60232616

EUROPE
Pfarrer-Bensheimer-Strasse 7a
55129 Mainz, GERMANY
Phone: +49 (0) 6136 926 3246

Hong Kong SAR
Unit 9, 12th Floor, Wing Tuck Commercial Centre
177 Wing Lok Street, Sheung Wan, Hong Kong SAR
Phone: +852-2851 4722

USA
2710 Thomes Ave
Cheyenne, WY 82001, USA
Phone: +1-203 816 5188

VIETNAM
11th Floor, Hoa Binh Office Tower
106 Hoang Quoc Viet Street, Nghia Do Ward
Cau Giay District, Hanoi 10649, VIETNAM
Phone: +84-24-37955917

WEB: www.ascentcomtec.com

EMAIL: sales@ascentcomtec.com

Specifications and product availability are subject to change without notice.

Ver. ACT_OSFP_400G_SR4_A05_Datasheet_V1c_Sep_2022