2 or 4-port Optical Node Deep Fibre Solution

AON2200C Series

- 1 GHz bandwidth
- Deep fibre node with 2 high outputs (50 dBmV)
- Fwd redundancy or return Segmentation
- Suitable for MDU, SMB
- GaAs Technology
- Modular Return Transmitter (FP or DFB)
- Optional Burst Mode
- 15 A Power Passing
- LED Status Indicators

AON2200 Series 2 or 4 port Node is part of ACT Deep Fiber solution, which helps operators expand bandwidth of their existing HFC network while minimizing capital investment. The AON2200 compact node is designed with two or four high outputs up to 50dBmV.

The AON2200 2 or 4 Node is specifically catered for small network segmentation. The 2 or 4 port node is capable of accommodating 2 forward receiver modules and 2 return transmitter modules with full redundancy functionality; and also return segmentation capability, which provide MSOs with an economical, flexible configuration option for advanced HFC Video, FTTx, high density MDU, or SMB, University applications.

With the compact housing, modular design, AON2200 node series improve overall network performance, and offer sufficient bandwidth for MSOs to deliver advanced video, high speed data, and voices services to their customers.

Key Features

- High performance 1GHz RF Spectrum
- High output power (50dBmV high level 2 port output) to eliminate last amplifier
- With capability of field upgrade operation for redundant 2 forward receiver and 2 return transmitters
- Electrical control ATT and EQ adjustment (1 dB step)
- Wide operation temperature range -40 °C to +60 °C
- With optical power TP and LED display for receiver and transmitter module
- Optional burst Mode operation in Return Transmitter
- 15A power current passing capability Compact housing and low power consumption
- High performance and cost effective deep fibre solution for FTTX, MDU, SMB applications

Block Diagram

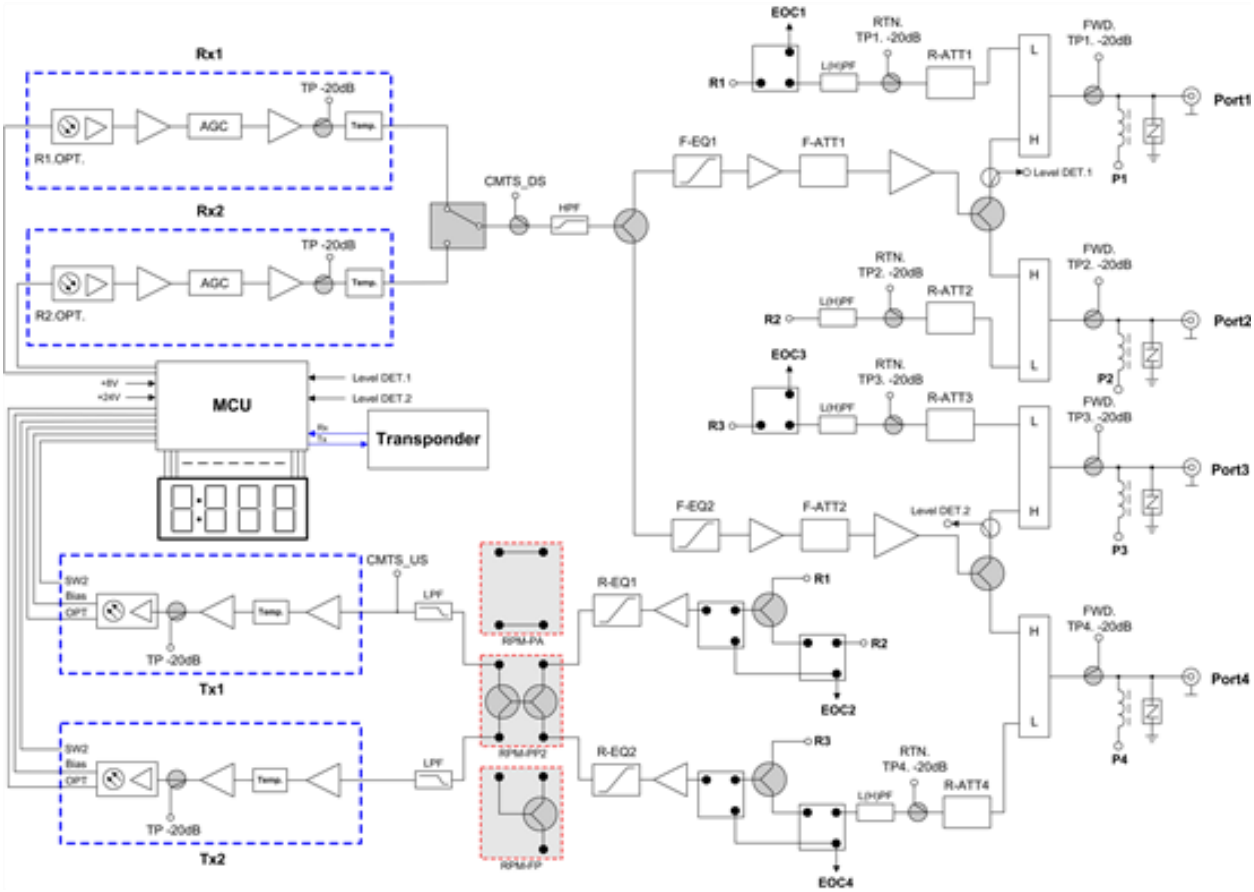

Specifications

AON2200C Deep Fibre 2 or 4 Port Optical Node

Downstream Specifications (Receiver)	
Optical Wavelength	1200 nm 1600 nm
Optical Input Power	-8 dBm to +2 dBm
Optical Return Loss	45 dB
RF Bandwidth	45/87 MHz to 1003 MHz
Reference Output Level	50 dBmV @ 2 port, 60 PAL, 3% OMI
RF Flatness	±0.75 dB @ 14dB Slope
RF Return Loss	≥-16 dB (85 MHz to 550 MHz)
RF Input Impedance	75 Ω
RF Test Point	-20 dB
Link Performance	
CNR	51 dB (79 ch NTSC+75QAM, 20 km, 3%OMI, 0 dBm receive)
CTB	-65 dBc
CSO	-60 dBc
Upstream Specifications (Optional Transmitter)	
Optical Wavelength	1310 nm, 1550 nm, CWDM
RF Bandwidth	5 MHz to 42 MHz, 5 MHz to 65 MHz
Output Power	3mW (RF input > threshold)
RF Input Level Threshold	12 dBmV to 25 dBmV
RF Flatness	0.75 dB
RF Return Loss	16 dB
Optical Return Loss	45dB
RFoG Burst Mode RTX NPR	20dBmV @ 30dB
RF Trigger Level ON/OFF	10+/-1dB , 5+/-2
Burst On/Off Delay Time	<1.5us, <4us
General Specifications	
Optical Connector	SC/APC
RF Outputs	2 or 4 F Female
Power Supply	35 V_{AC} to 90 V_{AC} or 150 V_{AC} to 265 V_{AC}
Operating Temperature	-40 °C to +60 °C
Operating Humidity	5 % to 95 % RH (non-condensing)
Power Consumption	45 W max with fully loaded module
Dimensions (W × D × H)	360 mm × 330 mm × 155 mm

Ordering Information

AON2200C Cabinet Series 2 or 4 port Output, 2x2 Fiber Deep Node Ordering Information

AON2210C-	XX-	X-	XX-	XX-	XX-	X-	X

	Segmentation
00	No RX or TX
10	1 RX and no TX
11	1 RX and 1 TX
12	1 RX, and 2 Seg TX
21	2 Red RX, 1 TX
22	2 Red RX, 2 Red TX
24	2 Red RX. 2 Seg TX

	Forward Receiver
0	No RX
1	Std RX (-8~2dBm)

	Return Transmitter
00	None
0y	Single RTX
xy	Dual RTXs
A	1550 DFB 3mW
B	1310 FP 3dBm
C	1310 DFB 3mW
D	1611 RFoG 3dBm
E	1591 RFoG 3dBm
F	1611 CWDM 0dBm
G	1591 CWDM 0dBm
H	1571 CWDM 3dBm
I	1551 CWDM 3dBm

	Band Split
42	42/54 MHz
65	65/85 MHz

	Optical Connector
AS	SC/APC
AF	FC/APC

	Power Supply
1	35 to 90 VAC Line Power
2	150 to 265 VAC Main Power

	EMS
0	No EMS

Contact Information

Ascent Communication Technology Ltd

AUSTRALIA
140 William Street, Melbourne
Victoria 3000, AUSTRALIA
Phone: +61-3-8691 2902

CHINA
Unit 1933, 600 Luban Road
200023, Shanghai CHINA
Phone: +86-21-60232616

EUROPE
Pfarrer-Bensheimer-Strasse 7a
55129 Mainz, GERMANY
Phone: +49 (0) 6136 926 3246

HONG KONG SAR
Unit 9, 12th Floor, Wing Tuck Commercial Centre
177 Wing Lok Street, Sheung Wan, HONG KONG
Phone: +852-2851 4722

USA
2710 Thomes Ave
Cheyenne, WY 82001, USA
Phone: +1-203 816 5188

VIETNAM
15 /F TTC Building, Duy Tan Street
Cau Giay Dist., Hanoi, VIETNAM
Phone: +84 243 795 5917

WEB: www.ascentcomtec.com

EMAIL: sales@ascentcomtec.com

Specifications and product availability are subject to change without notice.
Copyright © 2016 Ascent Communication Technology Limited. All rights reserved.
Ver. ACT_AON2200C_Series_Datasheet_V1e_Nov_2016